REFERENCE COPY
C.2

SANDIA REPORT

SAND91—1282 • UC—236
Unlimited Release
Printed August 1992

Boiler Efficiency Methodology for Solar Heat Applications

SNLA LIBRARY
* 8 5 0 7 5 8 7 *
SAND91-1282
0002
UNCLASSIFIED
08/92
88P STAC

D. Maples, J. C. Conwell, J. E. Pacheco

Prepared by
Sandia National Laboratories
Albuquerque, New Mexico 87185 and Livermore, California 94550
for the United States Department of Energy
under Contract DE-AC04-76DP00789

Issued by Sandia National Laboratories, operated for the United States Department of Energy by Sandia Corporation.

NOTICE: This report was prepared as an account of work sponsored by an agency of the United States Government. Neither the United States Government nor any agency thereof, nor any of their employees, nor any of their contractors, subcontractors, or their employees, makes any warranty, express or implied, or assumes any legal liability or responsibility for the accuracy, completeness, or usefulness of any information, apparatus, product, or process disclosed, or represents that its use would not infringe privately owned rights. Reference herein to any specific commercial product, process, or service by trade name, trademark, manufacturer, or otherwise, does not necessarily constitute or imply its endorsement, recommendation, or favoring by the United States Government, any agency thereof or any of their contractors or subcontractors. The views and opinions expressed herein do not necessarily state or reflect those of the United States Government, any agency thereof or any of their contractors.

Printed in the United States of America. This report has been reproduced directly from the best available copy.

Available to DOE and DOE contractors from
Office of Scientific and Technical Information
PO Box 62
Oak Ridge, TN 37831

Prices available from (615) 576-8401, FTS 626-8401

Available to the public from
National Technical Information Service
US Department of Commerce
5285 Port Royal Rd
Springfield, VA 22161

NTIS price codes
Printed copy: A05
Microfiche copy: A01

Distribution Category UC 236

SAND91-1282

Unlimited Release
Printed August 1992

Boiler Efficiency Methodology for Solar Heat Applications

D. Maples
J. C. Conwell
Boiler Efficiency Institute
Baton Rouge, Louisiana

J. E. Pacheco
Solar Thermal Technology
Sandia National Laboratories
Albuquerque, New Mexico

Abstract

This report contains a summary of boiler efficiency measurements which can be applied to evaluate the performance of steam-generating boilers via both the direct and indirect methods. This methodology was written to assist industries in calculating the boiler efficiency for determining the applicability and value of thermal industrial heat, as part of the efforts of the Solar Thermal Design Assistance Center (STDAC) funded by Sandia National Laboratories. Tables of combustion efficiencies are enclosed as functions of stack temperatures and the amount of carbon dioxide and carbon monoxide in the gas stream.

TABLE OF CONTENTS

INTRODUCTION 7

SECTION 2: DESCRIPTION OF BOILERS 9
- 2.1 Introduction 9
- 2.2 Fire-Tube Boilers 9
- 2.3 Water-Tube Boilers 12

SECTION 3: MEASUREMENT OF BOILER EFFICIENCIES 19
- 3.1 General 'Rules of Thumb' 19
- 3.2 Determination of the Performance of Boilers 20
- 3.3 Testing Procedure for the Direct Method 20
- 3.4 Efficiency of the Boiler using the Direct Method 21
- 3.5 Testing Procedure using the Indirect Method 23
- 3.6 Combustion Efficiency of a Boiler Using the Indirect Method 24
- 3.7 Minimum Data Required for the Indirect Method 26

SECTION 4: TESTING AND DATA ANALYSIS/REDUCTION 27
- 4.1 Instrumentation for Combustion Efficiency Testing 27
- 4.2 Error Analysis of the Indirect Method 29
- 4.3 Boiler Efficiency Obtained From Combustion Efficiency 29
- 4.4 Measurement of Skin Boiler Temperature 29
- 4.5 Heat Loss From Surface Of Boiler 31

SECTION 5: USE OF TABLES TO DETERMINE BOILER EFFICIENCY 33
- 5.1 Fuel Composition Tables 33
- 5.2 Example Using Combustion Efficiency Tables 34
- 5.3 Index for Tables of Data 35

INTRODUCTION

This methodology was written to assist industry in calculating the boiler efficiency for determining the applicability and value of thermal industrial heat. This effort is part of the Solar Thermal Design Assistance Center (STDAC) funded by the U. S. Department of Energy. The goal of the STDAC is to increase the transfer of technologies to industries and provide assistance in the design of solar thermal systems. Many potential solar applications could provide thermal input to processes that have an existing, conventionally-fueled boiler. The most frequent application is using a solar system to displace the fuel used to heat condensate and feedwater. The value of the heat displaced by the solar system is used to assess the economic performance of the solar system and is calculated by dividing the cost of the conventional fuel by the boiler efficiency. Because the revenue and cost of many existing and proposed solar heat systems are tied to the boiler efficiency, this report was written to provide an accurate guide for calculating boiler efficiency.

It is estimated that more than 70×10^{15} BTU's of energy are used in the United States per year. Of this amount, industry uses approximately 17 percent to generate process steam. This amount does not include the steam or hot water generated in schools, hotels, commercial buildings, electric power plants, etc.

This manual is arranged in four basic sections:

1. Initially, an overall description of boilers is provided. This overview contains a short description of the essential principles involved in determining boiler efficiency.

2. Tables are provided to relate boiler efficiency as a function of stack temperature, O_2, CO_2 and CO for typical grades of fuels, including natural gas, fuel oils, and coals.

3. An in-depth description outlines a methodology to estimate boiler efficiencies. Two methods are discussed, and each provides information that allows estimation of boiler efficiency as a function of combustion efficiency, percent of load placed on the boiler, and the skin temperature of the boiler. In addition, rules of thumb are provided to help estimate ways of improving and estimating boiler efficiencies.

4. Last, a description is given of boiler efficiency measurement instrumentation, including a method to determine calibration, accuracy, and data reduction methods.

All methodologies discussed in this text are intended to be applied in a thorough analysis of the current operating status of the boiler, and are based upon sound

fundamentals and engineering knowledge. References are made throughout the text to information that will provide a more in-depth treatment of the subject matter than is made here.

SECTION 2: DESCRIPTION OF BOILERS

2.1 Introduction

Steam boilers today range in size from those required to heat a small-sized home to the very large and efficient ones used in electric power generating stations. Some utility boilers deliver approximately ten million pounds of steam per hour, and consume more than five hundred tons of coal during the same time period. The scope of this manual, however, is focused on those boilers commonly used in industrial applications, which can be viewed as lower pressure, steam-producing boilers.

The primary purpose of a steam generator is the generation of steam at a pressure above that of the atmosphere. The steam is produced due to the transfer of heat from a combustion process or from a heat source within the boiler, or from resistance heaters, in the case of electric boilers. A boiler is composed of (1) a pressure system for the actual steam conversion; (2) a structural aspect to provide boiler support and the combustion area; (3) a means of introducing fuels and removing waste products; (4) a means of instrumentation and control to regulate the boiler operation. Numerous technological advances in all of these areas have led to the widespread (and increasing) usage of steam throughout industry.

Boilers have undergone significant design, fabrication and operational changes over the past 100 years. During this design evolution, the properties of steam and water have been accurately measured and tabulated for use by a boiler designer. New understanding of boiler thermodynamics and heat-transfer phenomena has been developed, as well as the means for burning large quantities of fuel safely and efficiently to produce the large amount of steam required today. Advances in metallurgy have yielded significantly better steels and alloys, allowing higher pressures and temperatures and reduced corrosion in modern-day boilers, leading the increased efficiencies. Finally, industry-wide codes and standards now regulate the design, safety, fabrication, and inspection of critical pressure parts.

At this time, there are three main types of steam-producing boilers: (1) fire-tube construction; (2) water-tube construction; and (3) electric boilers. Only the first two are considered in the following sections, with their advantages, as well as disadvantages being noted.

2.2 Fire-Tube Boilers

Boilers are classified by the relative position of the hot combustion gases with respect to the fluid to be heated. In fire-tube type construction, the hot gases of combustion circulate around a majority of the shell, and inside tubes that are submerged in water within the shell, as shown in Figure 2.1.

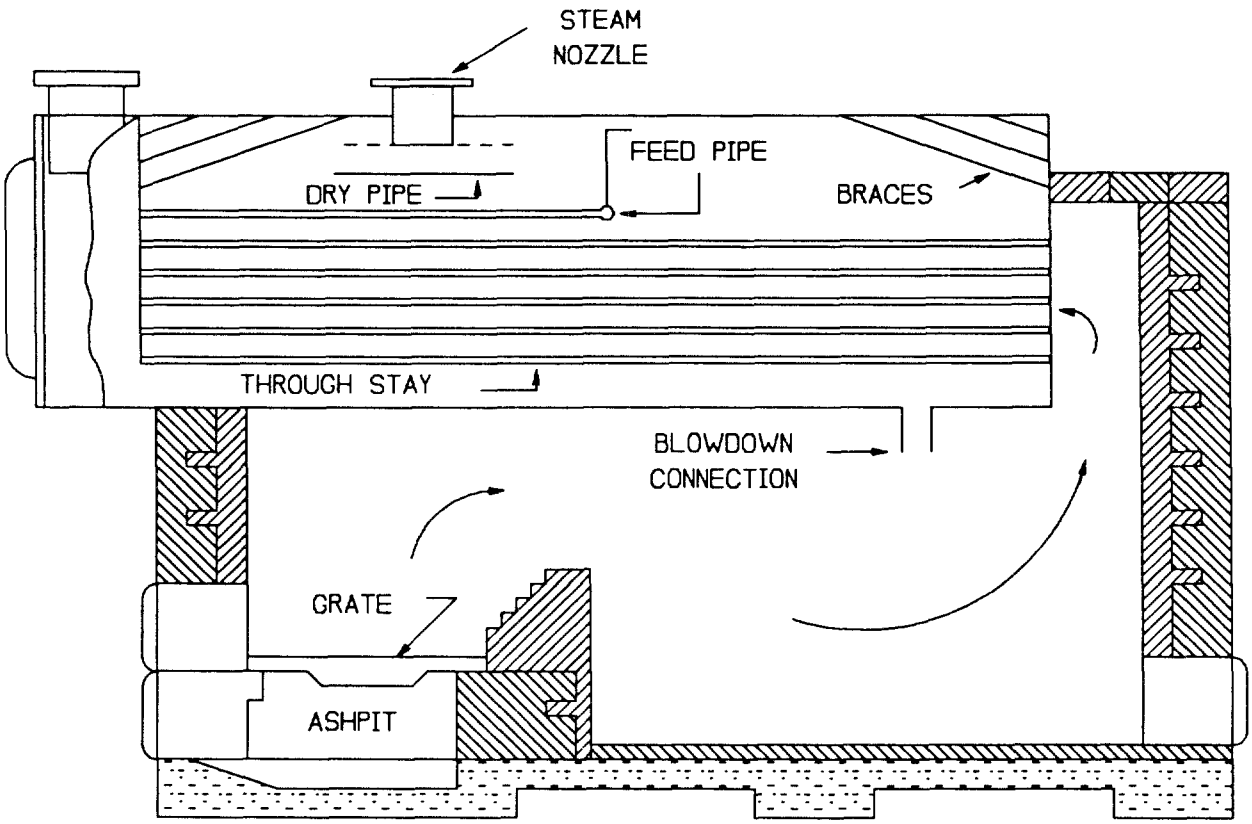

Figure 2-1: Sectional Sketch of a Horizontal-Return Fire-Tube Boiler

The combustion gases are forced to make several passes through longitudinal tubes via baffles at the boiler cap ends. As the hot gases flow through the tubes, they transfer their combustion heat by convection to the tubes, which in turn become hot and cause the neighboring water to boil. Because heat is transferred from the large surface area of the tubes, the efficiency of the modern fire-tube is much higher than that of a simple shell-type boiler heated by an external fire, as was first tried. Under favorable conditions of fuel and at a rating not exceeding the capacity of the boiler, the efficiency of this type of boiler can approach 80 percent.

Note in Figure 2-1 showing a simple, one-pass horizontal return-tube fire-tube boiler, the whole boiler shown is acted on by the steam pressure. As this is a large pressure vessel, large internal stresses exist because of this steam pressure, and a large margin of safety must be incorporated into the boiler design to prevent failure of the boiler shell, which could cause extensive damage. As a result, design operating pressures for the fire-tube boilers normally run in the 150 psig range, and these units normally have a capacity range of up to 30,000 pounds of steam per hour. This low pressure limit usually relegates the fire-tube boiler to requirements involving thermal process heating rather than power production. Hence, super-heating the steam is usually not a requirement for a fire-tube boiler.

Many arrangements of the fire-tube boiler have been developed. Tubes have been placed in horizontal, vertical, or inclined positions, with one or more gas passes. An early simple arrangement was the horizontal, return-tube boiler, or HRT, which was shown above as Figure 2-1. In this arrangement, the furnace and grate are located directly below the front end of the shell, and coal is fed onto the grate through a fire door located at the boiler front. The hot gases travel up and over the refractory brick dam, transferring some of their heat to the boiler shell outer surface. The combustion gases are then reversed by brick baffling, and travel through the tubes toward the lower pressure flue gas exit. This boiler can be easily retrofitted to natural gas or fuel oil firing.

The early HRT fire-tube boiler had several drawbacks. First, partial construction of the boiler had to take place on location. Because much of the foundation had to be lined with refractory brick, it took considerable time and manpower. Second, the combustion gases made only one 'pass' through the water, resulting in marginal heat transfer. Exhaust flue gas temperatures were high, indicating that much of the available heat was being lost out of the stack. Third, the system was bulky and was not readily adaptable to additions and alterations needed as a result of varying manufacturing processes. Last, large convection and radiation losses resulted because of the large external combustion area. This took its toll in the overall system operating efficiency and decreased its attractiveness. The main advantage of the HRT is its ability to burn solid, liquid, or gaseous fuels.

A special class of fire-tube boiler is known as the firebox. In this type of boiler, the firebox and furnace are located within the shell. A well-known example is the Scotch Marine Boiler shown in Figure 2-2.

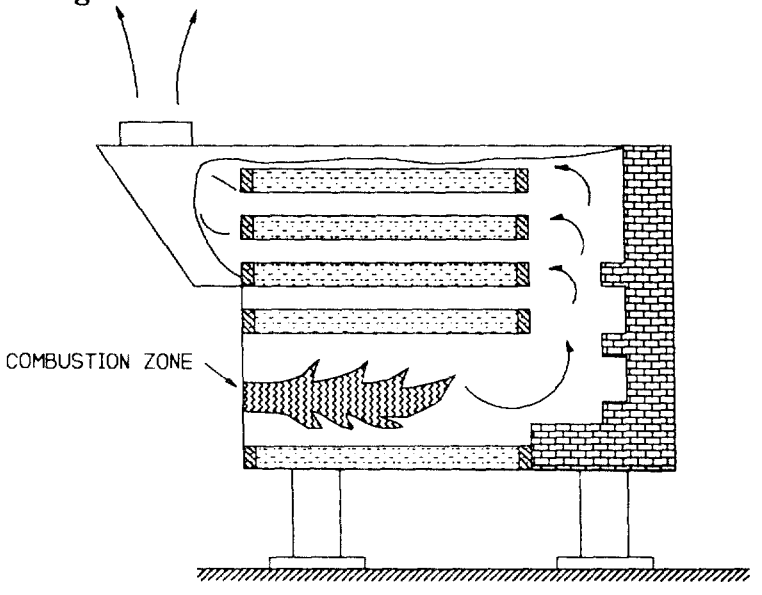

Figure 2-2: Internal Furnace, Fire-Tube Boiler

Combustion in this boiler takes place within one or more cylindrical water-cooled chambers, with the gases leaving the chamber towards the rear and returning through the fire tubes to the stack at the front of the boiler. As the chambers are located within the shell, no brick setting is required for this type boiler, and a reduction the radiation and convective losses is realized. Compared with the HRT boiler, the firebox type is self-contained and compact. The Scotch Marine Boiler however, is limited in steam output since the diameter seldom exceeds 14 feet. A greater diameter, again, tends to require an excessive plate thickness. The steam output is accordingly limited to approximately 30, 000 pounds of steam per hour for the larger sizes.

A package boiler is supplied with all necessary controls, foundation and boiler insulation. A package boiler is easily installed, requiring only a level placement area, fuel, electrical connections and steam piping connections. Numerous monitoring controls are part of the electrical system and will automatically shut down the unit in the event of low steam demand, low water level, low voltage, flame failure, etc.

Packaged fire-tube boilers are cheaper in initial investment than their water-tube counterparts up to an output of approximately 30,000 pounds of steam per hour. Under optimum conditions, and at maximum load, these units usually demonstrate an 80 percent efficiency, and yield a heat release of about 100,000 BTU's per hour per square foot of heating surface.

The advantages of this type of boiler system include:

- The ability to meet wide and sudden load fluctuations with only slight pressure changes due to the large amount of water stored in the shell.
- A low initial cost and relative maintenance.
- A simple installation procedure to bring the system on line.
- An automated, self-regulating control system.
- Ease in cleaning the fireside.

2.3 Water-Tube Boilers

Historically, as the demand for steam capacity and pressure increased, the shell diameter of the fire-tube boiler grew to a prohibitive size. The combined effect of the known stresses induced by the pressure and the indeterminate thermal stresses, further aggravated by scale deposits from hard water, caused many boiler explosions. Refinement of boiler design soon led to the water-tube construction, wherein the water was circulated inside the tubes and the flue gas was outside the tubes. This type boiler could safely supply the desired increased capacities and pressures over those obtainable from earlier fire-tube boilers. Water-tube boilers now range in capacity from small, low-output units of

about 2,000 pounds of steam per hour to a large central station boiler operating in the supercritical pressure and temperature regions supplying more than 10 million pounds per hour of stem to large turbine generators. Although available in the smaller classes, the field of water-tube boilers begins around the 15,000 pounds of steam per hour area and has the definite advantage of supplying superheated steam up into the critical steam region.

Water-tube boilers may be further sub-classified according to certain characteristics: inclined or bent tube configurations, reservoir drum position, water circulation, number of drums and capacity. Each of these types arose from a particular need or installation, and changes were made to the basic configuration to accommodate these needs.

It was noted early in the design evolution that it is desirable to have as large a heat transfer surface for the combustion gases as possible. This led to the inclined tube configuration. By inclining the tubes at an angle, boiler makers were able to use longer water tubes and thus increase the potential surface area for heat transfer. The inclination of these tubes also helps the natural water circulation.

The longitudinal-drum boiler was the first water-tube boiler developed, although it has been all but replaced by various modifications of the cross drum configuration. In the longitudinal drum boiler, shown in Figure 2-3, feedwater is introduced through a feed pipe in the front of the boiler drum, inducing a flow toward the rear of the drumhead.

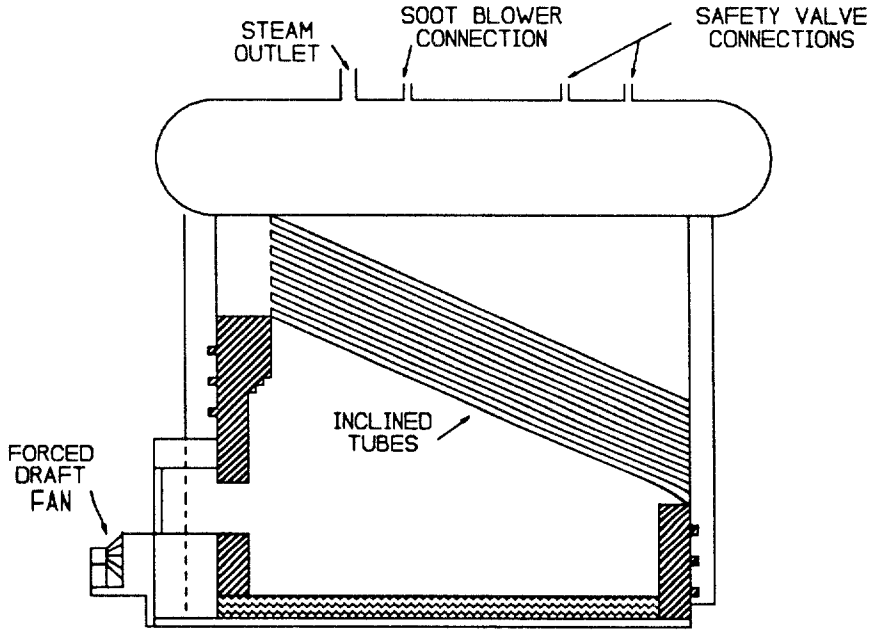

Figure 2-3: Longitudinal Drum Boiler

This water, being cooler and more dense, then passes downward through the rear circulating header into the rear inclined tubes. Heat is constantly being added to the tubes by the combustion gases, and as the cooler water enters the base of the inclined tubes, it begins to heat up. The density of hot water is less than that of cold water, and so the water circulates up the inclined tubes, toward the front of the steam header. Steam bubbles that are produced in the tubes rise with the water into the front manifold, separate, and then pass to the steam space in the drum above. Because the number of tubes that can be accommodated by the longitudinal drum is limited, even in a multi-drum configuration, the cross-drum boiler system was developed.

Cross-drum boilers, Figure 2-4, have one large drum set crosswise to the furnace or perpendicular to the water tubes.

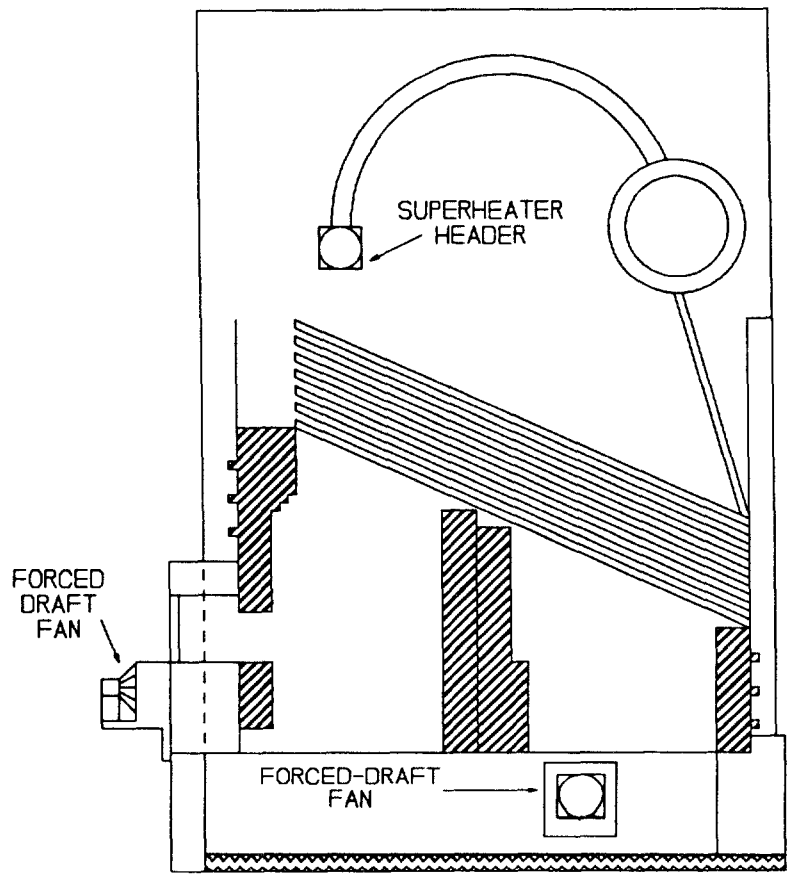

Figure 2-4: Cross Drum Boilers

In this manner, one long continuous drum can serve as the steam-collecting drum for a large number of inclined tubes. The cross-drum configuration achieves a more uniform steam temperature than that of the longitudinal drum, although it has a serious disadvantage in that it is subject to faulty circulation at high steam demands. When this happens, the upper parts of the tub may become dry (steam at the upper part of the tubes and water in the tube bottoms). This condition enhances corrosion and the possibility of

blistering or rupturing the upper part of the tube. Typical capacities of the longitudinal drum boiler run from 5,000 to 80,000 pounds of steam per hour, whereas for the cross-drum configuration, this range is expanded from 1,500 to 525,000 pounds per hour of steam. Efficiencies on the order of 70 to 80 percent are obtainable with the cross drum steam generator.

Further evolution of boilers included the bent-tube boiler, shown in Figure 2-5.

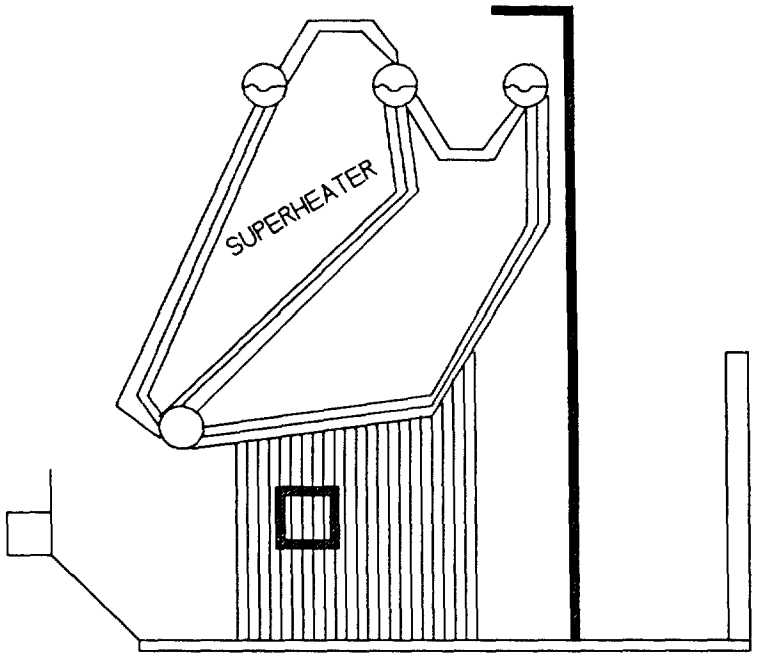

Figure 2-5: Bent-Tube Boiler of the Stirling Type

Frequently called the Stirling boiler, the first of these designs employed four drums located in a cross-drum fashion, with the bent water tubes entering directly into each of the drums. The tube entries are so positioned that they all enter the drum wall on a radius to keep the tubes separated, and provides adequate tube spacing for heat transfer from the combustion gases. This bent tube configuration provides a larger surface area for heat transfer, as well as promotes natural water circulation.

The lower drum of the Stirling type is called the mud drum. The mud drum is kept completely full of water, and a blow-off connection is provided at the base to remove accumulated solids. The three upper drums all have varying mixtures of water and steam, and are interconnected by lines, whereby the produced steam can be extracted from one (left-hand) cross-drum. Feedwater is also introduced to this drum, and as its density is greater, it travels down the 'downcomer' tubes at the boiler's left or rear. The front bent tubes are placed over the combustion process, and result in heating the water, causing it to rise and become steam. The middle drum and associated tubes are, in most cases, 'risers' also. However, their shape can change with boiler load and possibly cause circulation difficulties or nearly stagnant tubes.

Circulation of the feedwater within the tubes is one of the most important considerations in a water-tube boiler design. An elementary water-tube boiler is shown in Figure 2-6, which is referenced for discussion purposes.

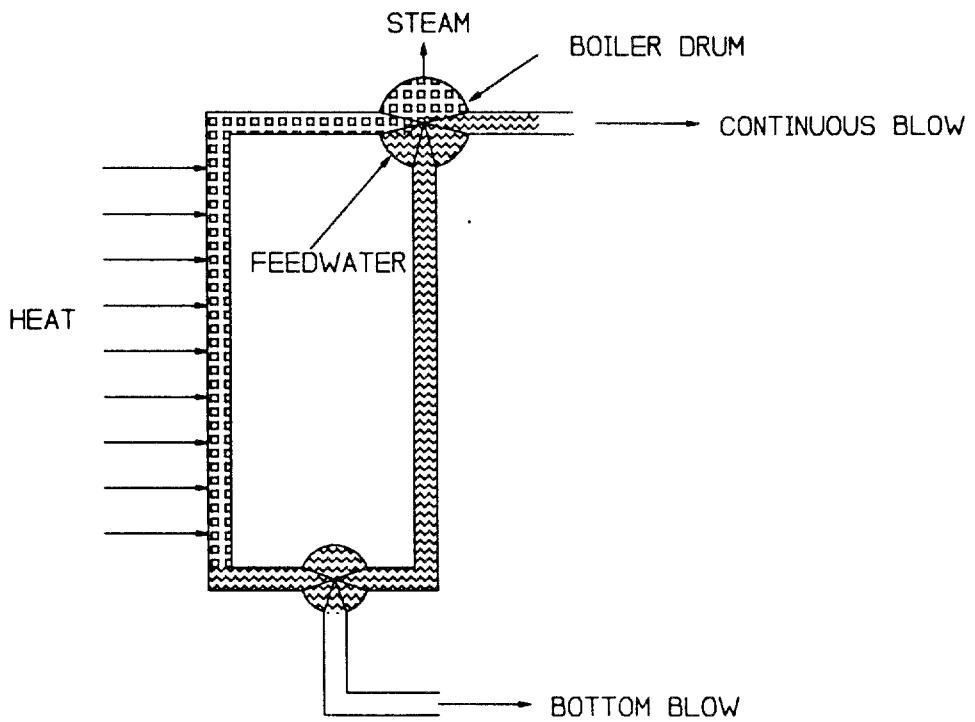

Figure 2-6: An Elementary Water-Tube Boiler

In any water-tube boiler system, the circulation system starts with the boiler drum and ends with the boiler drum. We will assume that all heat transfer occurs in the riser section of the boiler. Feedwater, or condensed boiler water, is fed into the elevated boiler drum. As this water is essentially at saturated conditions, its density will be greater than that of the hot water exiting the riser. Therefore, this cooler water will enter the downcomer and flow toward the lower drum. After arrival at the lower drum, it is forced to enter the riser by the pressure of the entering feedwater. On its travel upward, heat is transferred to the water, causing it to evaporate into steam, with the result that the fluid in the riser is then composed of a mixture of steam and water. The density of the mixture in the riser is less than that of the incoming feedwater, which provides the pressure to overcome the friction loss occurring in the system. Careful attention must be given to the sizing of the system, since, if a tube surface becomes dry, the coefficients of heat transfer will decrease and the tube wall will overheat and lead to possible blistering or rupturing. It is therefore extremely important to ensure the inside tube surface will be wet at all times.

As the operating pressure of the steam generator is increased, the difference in density between the saturated water and the saturated steam decreases, and consequently the driving head is reduced. The height of the boiler must, therefore, be elevated to provide a larger column of water to compensate for the dwindling density

differences. A boiler operating in the 1,200 psig range typically has the boiler drum located from 100 to 150 feet above the operating floor to ensure natural circulation. Boilers operating in the critical pressure usually have forced circulation utilizing pumps.

The number of boiler drums utilized in a steam generator varies from application to application. The early Stirling-type boiler utilized four boiler drums, although the trend in modern small-to-medium capacity boilers is to use three.

In the last forty years, the packaging of water-tube boilers of capacity up to 500,000 pounds per hour has evolved to the point that most new industrial boilers purchased are of the packaged type. Lower cost has been the main driving point for this development.

Packaged water-tube boilers have three basic designs. These are

- The "O" configuration
- The "A" configuration
- The "D" configuration.

These three configurations are shown in Figure 2-7 and are available in varying sizes to produce steam from 10,000 pounds per hour to 500,000 pounds per hour.

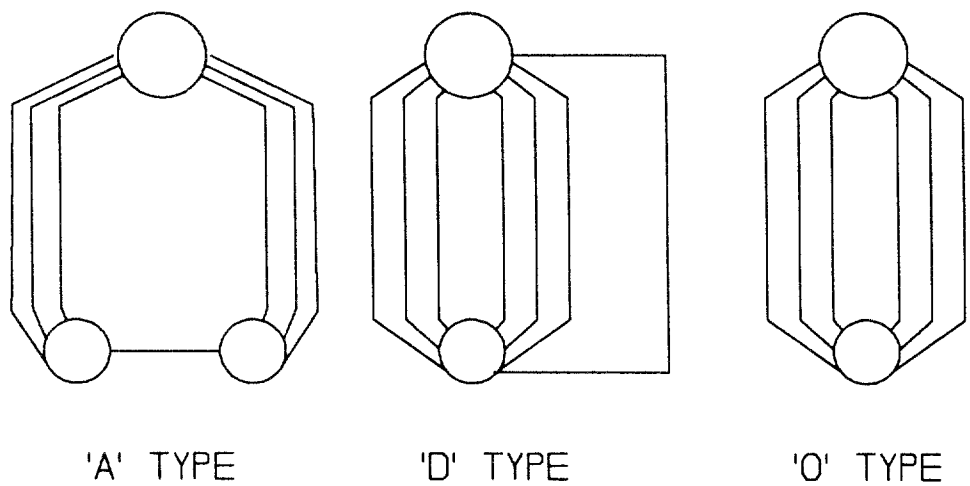

Figure 2-7: Package Boiler Configurations

In summary, the water-tube boiler is, in principle, the reverse of the fire-tube boiler. The hot gases are in contact with the outside surface of the tubes, and the boiler water and steam are in contact with the inside surface of the tubes. Fire-tube boilers are most economical in the small steam production range up to approximately 15,000 pounds of steam per hour. Capacities above this range are better handled by the water tube construction, which also has the capability of producing very high pressure and superheated steam. In their modern-day configuration, both have been optimized for a particular steam capacity and have been rigorously tested to ensure their safety in operation.

SECTION 3: MEASUREMENT OF BOILER EFFICIENCIES

3.1 General 'Rules of Thumb'

By making some simplifying assumptions, it is possible to achieve approximate efficiency improvements without making any detailed calculations. A few of these are detailed below.

- The return temperature of the condensate directly affects the boiler efficiency. The lower the condensate temperature, the greater the amount of heat required to bring the feedwater temperature to a given value. For every 10° F drop in condensate temperature, the boiler efficiency is decreased by one percent when a system is returning 100 percent of its condensate. If a boiler system employs an economizer, that increases the temperature of the feedwater using a waste heat source (for example, the exhaust gases) by 10°F, then the efficiency is increased by one percentage point. The temperature reduction in the feedwater can be calculated by the following:

$$T_{Feedwater} = \frac{(100 - \%\ of\ condensate\ returned)}{100} T_{\substack{make-up \\ water}} + \frac{\%\ of\ condensate\ returned}{100} T_{\substack{condensate \\ return}}$$

  For example, a system with a make-up water temperature of 50° F and a condensate return temperature of 180°F for a boiler with 50 percent condensate return, a decrease in condensate temperature of 20°F results in an efficiency loss of one percent.

- The design stack gas temperature exhausting a boiler when operating at or near full-load conditions is approximately 100° F above the steam temperature. A boiler operating at 100 psig pressure would have a saturated steam temperature of 338° F, which results in a stack gas temperature of 438°F when operating at full-load conditions. This is a good first approximation of the expected stack gas temperature measured at the exit of the boiler. Scale and deposits on the inner parts of the boiler reduce heat-transfer surface area, resulting in a higher temperature difference between the steam temperature and the boiler exhaust gas temperature. Every 40°F increase or change in the boiler stack gas temperature results in a 1 percent change in boiler efficiency.

- Every 40°F increase in combustion air temperature from a waste energy source results in a 1 percent increase in the boiler efficiency. Also, the reduction of the boiler stack gas temperature by 40°F results in a 1 percent increase in the efficiency of the boiler.

3.2 Determination of the Performance of Boilers

The performance of boilers is a function of the excess air used for combustion and the exit flue gas temperature, assuming the fuel is burned completely. The performance of a boiler may be determined by two methods described below.

Direct Method

The direct method measures steam generator efficiency or boiler efficiency. To perform this test, calibrated measurements must be made to determine the input and output flow rates of water and fuel as well as temperature, pressure and fuel composition.

Indirect Method

The indirect method measures the combustion efficiency. For a boiler, energy is released during combustion, and that energy either goes out the stack, through the boiler skin, or is used to heat the water/steam mixture. The combustion efficiency is the ratio of energy in the fuel to the sum of the energy flows from the boiler skin and energy transferred to the steam/water. To perform the test for combustion efficiency, it is necessary to obtain a fuel analysis and an exhaust gas analysis.

The method most often used in the field is the indirect method/combustion efficiency since fewer measurements are required. The problem with using the direct method for boiler efficiency is the field installation of calibrated instruments in existing lines, such as steam and fuel flow meters. Also, determining the energy level of the steam leaving the boiler poses a problem. This requires the installation of a throttling calorimeter on the main steam line in the case of wet or saturated steam. The metering of solid fuel flow is nearly impossible, and it may be required for the direct method.

However, the indirect method, which requires only the measurement of concentrations of exhaust gases (oxygen, carbon monoxide) as well as the temperature with calibrated instruments is relatively simple. The calibration of gas analyzers is accomplished by using bottled calibration gases, which are accurate within 1 part per million (ppm). Installing the instrumentation on a boiler to determine the indirect method/combustion efficiency is then very easily accomplished.

3.3 Testing Procedure for the Direct Method

The boiler should be tested at different flow rates of steam over the range in which the boiler is operated. The flow rates between successive tests should vary by about 10% of the boiler's rated capacity.

The following procedure is recommended:

1. Install calibrated instruments (See the following figure for illustration of installation that does not require shutdown.

2. Operate the boiler for one hour at the desired load prior to starting test.

3. Mark the water level in the boiler.

4. Perform test approximately one hour, reading:

   - Temperatures every 10 minutes
   - Pressures every 10 minutes
   - Flow rates every 15 minutes or total flow during the one hour test.

5. Stop test when the water level in the boiler is in the same position as the start of test.

The flow rates, temperatures and pressures should remain essentially constant during the test. This is necessary to reduce the error in evaluating the results of the test.

3.4 Efficiency of the Boiler using the Direct Method

The efficiency of a boiler using the direct method is defined as:

$$\eta = \frac{Output}{Input} = \frac{\dot{M}_s(h_{5a} - h_4)}{\dot{M}_f(HHV) + \dot{W}}, \tag{3.1}$$

where the variables are defined below in Table 3-1.

Table 3-1: Quantities Measured Using Direct Method

Quantity	Definition	Units
HHV	higher heating value of the fuel	BTU/lb
h_4	enthalpy of water entering boiler	BTU/lb
h_{5a}	enthalpy of steam leaving boiler	BTU/lb
$\dot{M}_f$	mass flow rate of fuel	lb/hr
$\dot{M}_s$	mass flow rate of steam	lb/hr
$\dot{W}$	work, or power for pumps, etc.	BTU/hr
η	boiler efficiency	- - -

The measurements needed to calculate the boiler efficiency are shown below in Figure 3-1.

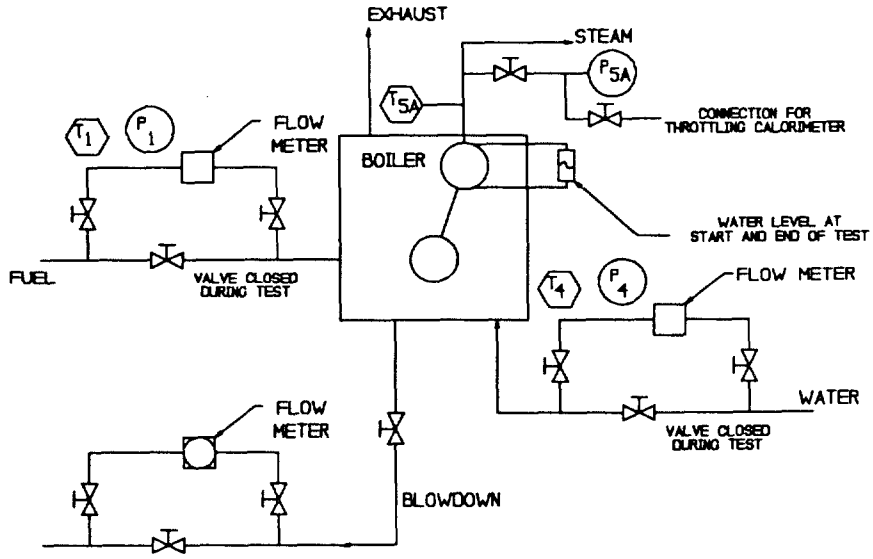

Figure 3-1: Measurements Necessary to Calculate Efficiency of Boiler using the Direct Method

With no blowdown, these are:

Water Entering the Boiler:

Flow rate, $\dot{M}_s$
Temperature, T_4
Pressure, P_4

Steam Leaving the Boiler:

Temperature, T_{5A}
Pressure (P_{5A}) or Quality (X_{5A}) if steam is saturated

For Fuel:

Flow Rate, $\dot{M}_f$
Temperature, T_1
Pressure, P_1
Higher Heating Value of Fuel (HHV)

The higher heating value of the fuel can usually be obtained by sending a sample to a fuel analysis laboratory. The fuel sample should be collected according to the recommended procedures.

The measurements necessary to determine the efficiency by the direct method are given in Table 3-2:

Table 3-2: Measurements for Direct Method

Quantity	Flow Rate	Temperature	Pressure	Quality	HHV
Feedwater					
Steam					
Fuel					

3.5 Testing Procedure using the Indirect Method

As with the direct method, the boiler should be tested at several load conditions over the entire range of operation when applying the indirect method. The following testing procedure is recommended:

1. Install calibrated instruments (see Figure 3-2)
2. Operate the boiler at specified load for approximately one hour prior to making the test.
3. Make an Orsat analysis of the exhaust gases
4. Take a fuel sample and measure fuel temperature and chemical composition
5. Record the following data:
    a. Intake air temperature, pressure and relative humidity
    b. Flue gas temperature and exhaust gas composition measured at the exit of the boiler.
    c. Fuel chemical composition

The flow rates and temperatures should remain essentially constant during the test.

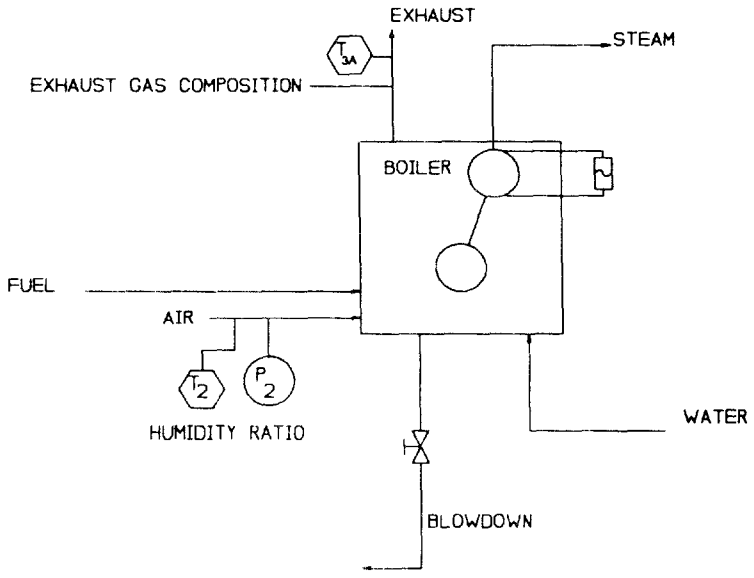

Figure 3-2: Measurements to Calculate Combustion Efficiency using the Indirect Method

3.6 Combustion Efficiency of a Boiler Using the Indirect Method

The combustion efficiency can be defined as the energy released in combustion divided by the higher heating value of the fuel. Mathematically, we write:

$$\eta_c = \frac{\left| h_{\text{products}} - h_{\text{reactants}} \right|}{HHV}. \tag{3.2}$$

The quantities used in Equation (3.2) are defined in Table 3-3.

Table 3-3: Measured Quantities Using the Direct Method

Quantity	Definition	Units
HHV	higher heating value of the fuel	BTU/lb
h_{products}	enthalpy of the products of combustion	BTU/lb
$h_{\text{reactants}}$	enthalpy of the reactants involved in combustion	BTU/lb

Table 3-4 indicates the measurements that must be made in order to estimate the combustion efficiency using the indirect method.

Table 3-4 Measurements Required for Indirect Method

Quantity	Temperature	Pressure	Humidity	Composition (Mole Percent)									HHV	Equivalent Hydrocarbon Composition	
				α	N_2	H_2O	O_2	C	H_2	S_2	CO	CO_2		C_AH_B	
														A	B
Combustion Air															
Exhaust Gases															
Fuel Properties															

3.7 Minimum Data Required for the Indirect Method

The minimum data required for the indirect method are as follows:

- Intake Air Temperature, T_2
- Incoming Fuel Temperature, T_1
- Type of Fuel (chemical composition)
- Exhaust Gas Temperature, T_{3A}
- Composition of the Exhaust Gas (CO and O_2).

Figure 3-3 shows the effect of all the variables on accuracy. In estimating the error, testing personnel should note that as a general trend, the error in efficiency increases as the flue gas temperature increases. Thus, curves for errors at higher flue gas temperatures would show greater errors in efficiency.

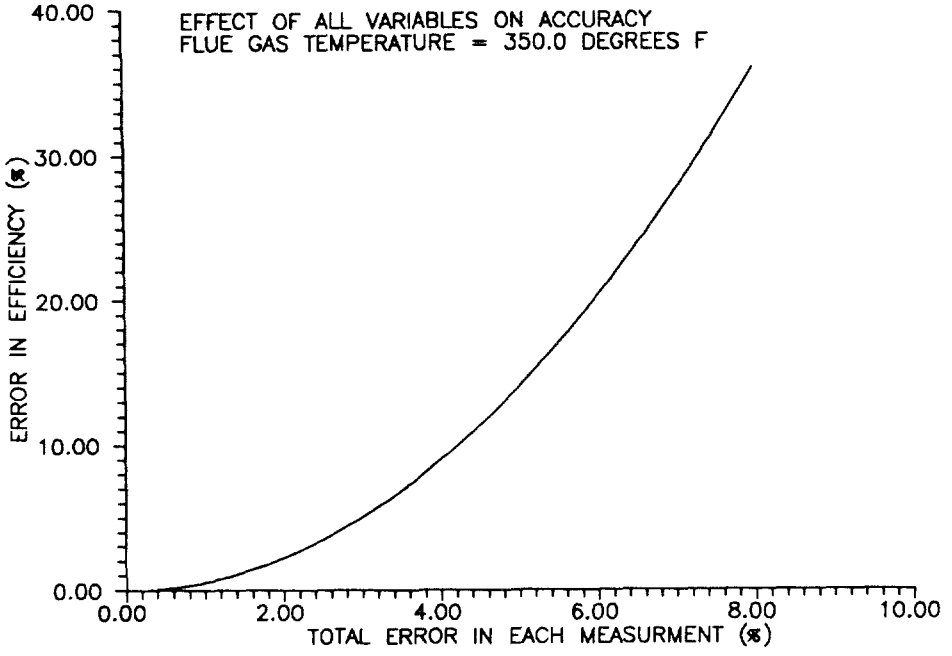

Figure 3.3: Errors in Estimating Combustion Efficiencies as a Function of Errors in Each Measurement

SECTION 4: TESTING AND DATA ANALYSIS/REDUCTION

4.1 Instrumentation for Combustion Efficiency Testing

Displayed in Table 4-1 are typical instruments to determine boiler combustion efficiency. Calibration of gas analyzers is accomplished through the use of bottled calibration gases. The oxygen calibration gas normally used is 5 percent O_2, while the gas for carbron monoxide is 400 ppm. The CO and O_2 are in the same bottle, with the remainder of the gas being nitrogen. The temperature instruments are routinely calibrated using the boiling point of water.

Table 4-1: Instruments Used in Boiler Efficiency Testing

Instrument	Description	Maximum. Allowable Error	Use	Method Employed	Model & Manufacturer
Flow Meter	Turbine Type	±0.25% of Flowrate	Measure fuel and feedwater flowrates	Direct	Vortex Shedding Meter Shenandoa, GA
Thermocouple	Type K: Chrome-Alum	±3°F	Measure temp. of fuel feedwater	Direct	Leeds & Northrup Northwale, PA
Thermocouple Readout	Millivolt Meter	±0.35%	Reads millivolt output from thermocouple	Direct	Omega Engineering Stamford, CT
Calorimeter	Throttling type	±0.2%	Energy Level of wet steam	Direct	U.S. Steam
Pressure Gage	Hiess Gage	±0.5% of full scale	Measure pressure of fuel and feedwater	Direct	Hiess Newton, CT
Orsat Analyzer	Flue Gas Analyzer	± 1% of actual volume	Measure CO and O2 in flue gas	Direct/Indirect	Burrell Corp. Pittsburgh, PA Model # 39-216
Neotronics	Electronic Flue Gas Analyzer	0.1% of actual volume	Measure O_2, CO and Stack Temperature	Direct/Indirect	Neotronics LTD of North America
Bacharat	Electronic Flue Gas Analyzer	0.1% of actual volume	Measure O_2, CO, Stack Temperature and Oxides of Sulfur and Nitrogen	Indirect	Bacharat, Inc, Pittsburgh, PA
Lancom	Electronic Flue Gas Analyzer	0.1% of actual volume	Measure O_2, CO, Stack Temperature and Oxides of Sulfur and Nitrogen	Indirect/Direct	Land Combustion Bensalem, PA
Teledyne	Electronic Flue Gas Analyzer	0.1% of Actual Volume	Measure CO and O2 in flue gas	Indirect	Teledyne, Inc. Los Angels, CA
Enerac	Electronic Flue Gas Analyzer	0.1% of Actual Volume	Measure O_2, CO, Stack Temperature and Oxides of Sulfur and Nitrogen	Indirect	Energy Efficiencies Systems, Westbury, NY

4.2 Error Analysis of the Indirect Method

The variables considered in error analysis are CO, O_2, and the flue gas temperature. The measured CO is a direct indication of the CO_2 level generated if the chemical composition of the fuel is also known. These variables were selected because they are the most significant in the calculation of the combustion efficiency. The only significant flue gas component variable is the CO_2, since it is the largest single measurement and contributes significantly to the absolute enthalpy of the products of combustion. The expected error in efficiency is taken to be the root-mean-square (RMS) of the sum of the individual errors.

The CO is measured in parts per million (PPM), which generally results in a very accurate determination of the CO_2 level. Calibrated instruments are used to determine the temperature and oxygen level. For example, ±0.2% error in CO_2, ±1% error in temperature, and ±1% error in the level of the oxygen, the total error from the reading would be:

$$Error_{RMS} = \sqrt{(0.2)^2 + (1.0)^2 + (1.0)^2} = 1.43\%\ Error.$$

Entering Figure 3.3 with this value for a stack temperature of 350°F, an expected error of 1.3 percent in the actual combustion efficiency results. It should be noted that as a general trend, the error in the efficiency increases as flue gas temperature increases.

The number of these variables is fewer than those required in the direct method resulting in a smaller efficiency error. Also, in the direct method, the measurements are more difficult to measure as accurately. These three variables represent the significant variables in the combustion efficiency calculations. The fuel composition is needed along with these three variables to determine the combustion tables.

As previously shown, there is a significant effect on the combustion efficiency resulting from errors in the measurement. In estimating error, it should be noted that as a general trend, the error in efficiencies increases as flue gas temperature increases. Thus, curves for errors at higher flue gas temperatures would show greater errors in efficiencies.

4.3 Boiler Efficiency Obtained From Combustion Efficiency

The boiler efficiency can be estimated from the combustion efficiency obtained from the measurements of CO, O_2, stack temperature and boiler combustion air temperature. The difference between boiler efficiency and combustion efficiency is the skin or surface boiler heat loss when the boiler blowdown is turned off. To determine the boiler heat loss, a measurement/calculation of the average boiler surface temperature is required and presented below.

4.4 Measurement of Skin Boiler Temperature

The outside boiler surface temperatures can be measured by two methods. The first is by obtaining a temperature profile of the boiler surface using infrared radiation, which

requires that the emissivity of the surface be known. A second method is to use a contact thermocouple to directly determine the surface temperature.

The outside surface temperature is normally determined by using a contact thermocouple. The surface temperature is an 'area weight averaged' and is determined by the following relation:

$$T_{avg} = \frac{\sum_{i=1}^{n} (Area_i T_i)}{\sum_{i=1}^{n} Area_i}. \tag{4.1}$$

The size of the area is not restricted in any way; for example, one area may be an entire vertical surface of the boiler.

4.5 Heat Loss From Surface Of Boiler

The heat loss from the outer surface of the boiler can be estimated in terms of the outer surface temperature of the boiler and the ambient air temperature. The heat loss per unit area can be estimated by Equation (4.2), using the variables defined in Table 4-2.

$$\frac{Q}{A} = h_c \Delta T. \tag{4.2}$$

Table 4-2: Variables Used for Determine Heat Skin Loss

Quantity	Definition	Units
Q	heat transfer	BTU/sec
A	area of the boiler	square feet
h_c	combined convective/radiative heat transfer coefficient	BTU/(ft^{2}sec °F)
ΔT	temperature difference (boiler surface - ambient)	°F

For the temperature range of most boilers, the value of h_c can be estimated to be:

$$h_c = 0.01\Delta T + 2.0. \tag{4.3}$$

A plot of the boiler skin heat flux is given below in Figure 4-1. The heat flux in BTU/hr can be obtained by the product of (Q/A)(A) for a given ΔT.

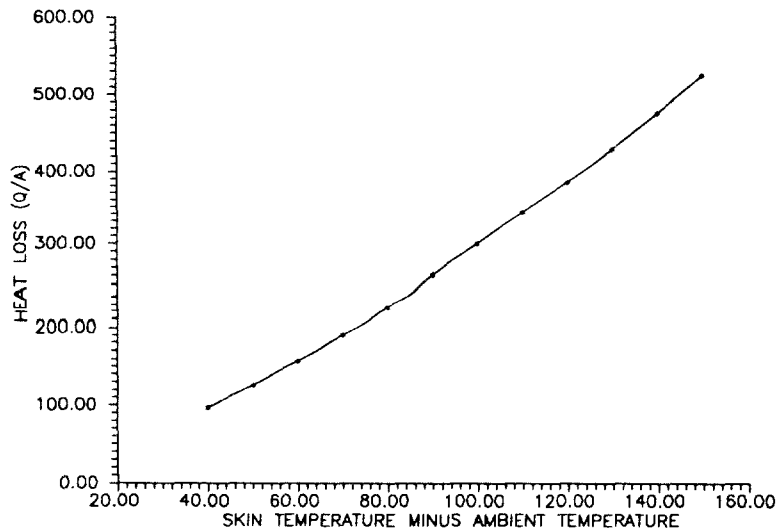

Figure 4-1: Plot of Heat Loss as a Function of the Difference in Skin Temperature and Ambient Temperature

The difference between boiler and combustion efficiencies can be illustrated in Table 4-3 as the percent skin heat loss. Note in the table that the skin loss is a higher percentage as the load changes (decreasing from full load). The skin losses for a specific case would be determined using the previously presented methodologies.

Table 4-3: Data Demonstrating Skin Loss Equivalence at 2 Percent of Boiler Fuel Input at Full Load

Boiler Load	Skin Loss, BTU/hr	Boiler Fuel Input BTU/hr	% Skin Loss
10%	1,000,000	5,000,000	20%
25%	1,000,000	12,500,000	8%
50%	1,000,000	25,000,000	4%
100%	1,000,000	50,000,000	2%

The general shape of combustion efficiency and boiler efficiency as a function of boiler load is illustrated in Figure 4-2.

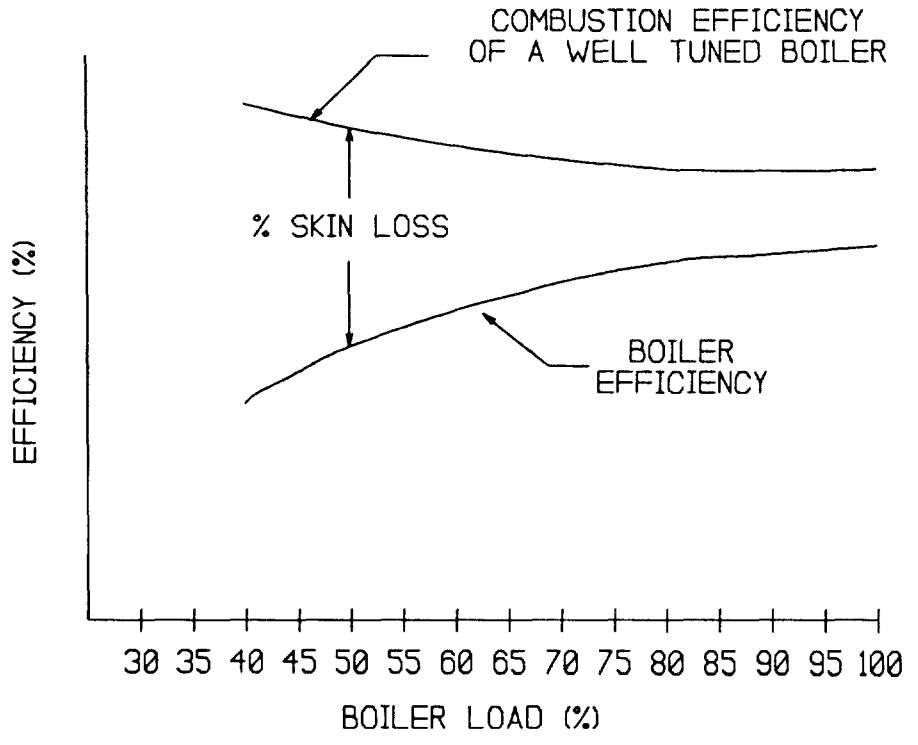

Figure 4-2: Sketch of Boiler Efficiency as a Function of Combustion Efficiency and Skin Heat Loss

The combustion efficiency of a boiler is indicated by the stack gas temperature and the oxygen level measured. The lower the temperature, and oxygen level of the boiler stack gases, the higher the combustion efficiency.

SECTION 5: USE OF TABLES TO DETERMINE BOILER EFFICIENCY

5.1 Fuel Composition Tables

Tables for combustion efficiencies are included in the following pages. Information is listed for:

- Natural Gas
- Number 2 Fuel Oil
- Number 6 Fuel Oil
- Coal

The tables have been generated knowing the mole composition of the fuel, and the flue gas temperature, the amount of oxygen in the flue gas, and the amount of carbon monoxide in the flue gas. Two tables listing fuel compositions are included below.

Table 5-1: Typical Fuel Properties

Fuel	Molecular Weight	Specific Heat	Enthalpy of Formation	Higher Heating Value
Natural Gas	16.7	0.487 (gas)	-2537	21,869
Number 2 Oil	208	0.480 (liquid)	-225	19,512
Number 6 Oil	338	0.480 (liquid)	-167	18,300
Coal	483.44	0.20 (solid)	-2374	14,203

Table 5-2: Typical Fuel Composition

Fuel	$\alpha(C_AH_B)$	$\alpha_1(N_2)$	$\alpha_2(H_2O)$	$\alpha_3(O_2)$	$\alpha_4(C)$	$\alpha_5(H_2)$	$\alpha_6(S_2)$	$\alpha_7(CO_2)$
Natural Gas	0.968 ($C_{1.02}H_{4.05}$)	0.0228	0.0	0.0060	0.0	0.0	0.0	0.0029
Number 2 Oil	0.940 ($C_{15.85}H_{27.26}$)	0.0075	0.0	0.0	0.0	0.0	0.0522	0.0
Number 6 Oil	0.785 ($C_{31.36}H_{42.65}$)	0.1108	0.0	0.0296	0.0	0.0	0.0739	0.0
Coal	0.965 ($C_{39.48}H_{26.19}$)	0.0053	0.0174	0.0097	0.0	0.0	0.0026	0.0

Note: Fuel compositions vary significantly, and that these data should be taken only as representative.

5.2 Example Using Combustion Efficiency Tables

This section details an example of the use of the methodology presented in this test to determine the boiler efficiency. The combustion efficiency is determined from the combustion efficiency tables and then the boiler efficiency is obtained from the combustion efficiency.

An instrument from Table 4.1 is used to determine the exhaust gas oxygen and carbon monoxide levels in the flue gas. This is accomplished by inserting a probe into the stack, close to the boiler, and pulling a sample of the exhaust gases. Also, at this point, the exhaust gas temperature is measured using a simple thermocouple. The inlet boiler combustion air temperature is measured. A typical set of data is listed below:

Stack Temperature: 450°F
Combustion Air Temperature: 70°F (This may be the boiler room air temperature)
Oxygen Level: 5%
Carbon Monoxide: 0.1% or 1000 PPM
Fuel: Natural Gas

The first step is to subtract the combustion air temperature from the stack temperature: (450 - 70) = 380°F. Enter the combustion table for natural gas, with a carbon monoxide reading of 0.1%, and an oxygen level of 5% and read out the combustion efficiency of 79.92%.

To determine the boiler efficiency using the combustion efficiency, the following is required:

- The boiler percent load, which is the ratio of the actual amount of steam being generated compared to the rated steam capacity of the boiler.
- The average skin temperature of the boiler obtained by applying Equation 4.1.
- The room air temperature measured with a thermocouple.
- The surface area of the boiler, in square feet.

Typical values for this example may be:

Boiler rated steam flow: 50,000 pounds/hour (obtained from nameplate)

Steam load on boiler at time of test: 30,000 pounds/hr (obtained from installed instrumentation or estimated as a percentage of fuel valve opening)

The average skin temperature: 180°F (obtained using a surface pyrometer and equation 4.1)

Boiler room temperature: 70°F

Total boiler surface area: 2933 square feet

The following can be easily determined:

$$T_{Average\,Skin} - T_{Room} = 180 - 70 = 110^{\circ}F.$$

Using Equations 4.2 and 4.3 or Figure 4.1, the skin heat loss is determined to be 341 BTU/hr-ft^2. The total skin loss is found by multiplying the area of the boiler (2933 ft^2) by the skin heat loss. This value will equal 1,000,000 BTU/hr. The percent load on the boiler is 30,000/50,000 = 80%.

The boiler efficiency is obtained by subtracting the percentage skin energy loss from the combustion efficiency by using the following relation:

$$Boiler\ Efficiency = Combustion\ Efficiency - \frac{Skin\ Loss}{Boiler\ Energy\ Input}$$

$$Boiler\ Efficiency = 0.7992 - \frac{1{,}000{,}000}{(0.8)(50{,}000)(1000)} = 0.766$$

5.3 Index for Tables of Data

FUEL	%CO	PAGE NUMBERS
Natural Gas	0.0	36-39
	0.1	40-43
	0.5	44-47
Number 2 Oil	0.0	48-51
	0.1	52-55
	0.5	56-59
Number 6 Oil	0.0	60-63
	0.1	64-67
	0.5	68-71
Coal	0.0	72-75
	0.1	76-79
	0.5	80-83

COMBUSTION EFFICIENCY TABLE FOR NATURAL GAS

Properties of Natural Gas:

Molecular Weight: 16.7 $\frac{lb}{lbm\ mole}$

Specific Heat: 0.487 $\frac{BTU}{lb\ R}$

Enthalpy of Formation: -2537 $\frac{BTU}{lb}$

Higher Heating Value: 21869.0 $\frac{BTU}{lb}$

Dry Products of Combustion						COMBUSTION EFFICIENCY *(Efficiencies are listed by flue gas temperature less surrounding temperature, °F)*													
$\%O_2$	$\%CO$	$\%CO_2$	$\%N_2$	$\%SO_2$	% Excess Air	170	180	190	200	210	220	230	240	250	260	270	280	290	300
0.00	0.00	11.87	88.13	0.00	0.00	86.53	86.32	86.10	85.89	85.68	85.46	85.25	85.03	84.82	84.61	84.39	84.18	83.97	83.75
0.50	0.00	11.59	87.91	0.00	2.18	86.46	86.25	86.03	85.81	85.59	85.37	85.16	84.94	84.72	84.50	84.28	84.07	83.85	83.63
1.00	0.00	11.30	87.70	0.00	4.47	86.39	86.17	85.95	85.72	85.50	85.28	85.06	84.84	84.61	84.39	84.17	83.95	83.73	83.50
1.50	0.00	11.02	87.48	0.00	6.87	86.32	86.09	85.86	85.64	85.41	85.18	84.96	84.73	84.50	84.28	84.05	83.82	83.60	83.37
2.00	0.00	10.74	87.26	0.00	9.40	86.24	86.00	85.77	85.54	85.31	85.08	84.85	84.62	84.39	84.16	83.92	83.69	83.46	83.23
2.50	0.00	10.46	87.04	0.00	12.07	86.15	85.92	85.68	85.44	85.21	84.97	84.74	84.50	84.26	84.03	83.79	83.56	83.32	83.08
3.00	0.00	10.17	86.83	0.00	14.89	86.06	85.82	85.58	85.34	85.10	84.86	84.62	84.37	84.13	83.89	83.65	83.41	83.17	82.93
3.50	0.00	9.89	86.61	0.00	17.86	85.97	85.72	85.48	85.23	84.98	84.74	84.49	84.24	84.00	83.75	83.50	83.26	83.01	82.76
4.00	0.00	9.61	86.39	0.00	21.01	85.87	85.62	85.37	85.11	84.86	84.61	84.36	84.10	83.85	83.60	83.35	83.09	82.84	82.59
4.50	0.00	9.33	86.17	0.00	24.36	85.77	85.51	85.25	84.99	84.73	84.47	84.21	83.95	83.70	83.44	83.18	82.92	82.66	82.40
5.00	0.00	9.04	85.96	0.00	27.91	85.65	85.39	85.12	84.86	84.59	84.33	84.06	83.80	83.53	83.27	83.00	82.74	82.47	82.21
5.50	0.00	8.76	85.74	0.00	31.69	85.54	85.26	84.99	84.72	84.45	84.17	83.90	83.63	83.36	83.09	82.81	82.54	82.27	82.00
6.00	0.00	8.48	85.52	0.00	35.72	85.41	85.13	84.85	84.57	84.29	84.01	83.73	83.45	83.17	82.89	82.61	82.33	82.05	81.77
6.50	0.00	8.20	85.30	0.00	40.03	85.27	84.99	84.70	84.41	84.12	83.84	83.55	83.26	82.97	82.68	82.40	82.11	81.82	81.53
7.00	0.00	7.91	85.09	0.00	44.65	85.13	84.83	84.54	84.24	83.94	83.65	83.35	83.06	82.76	82.46	82.17	81.87	81.57	81.28
7.50	0.00	7.63	84.87	0.00	49.61	84.97	84.67	84.36	84.06	83.75	83.45	83.14	82.84	82.53	82.22	81.92	81.61	81.31	81.00
8.00	0.00	7.35	84.65	0.00	54.95	84.80	84.49	84.17	83.86	83.54	83.23	82.91	82.60	82.28	81.97	81.65	81.34	81.02	80.71
8.50	0.00	7.07	84.43	0.00	60.72	84.62	84.30	83.97	83.65	83.32	82.99	82.67	82.34	82.02	81.69	81.37	81.04	80.71	80.39
9.00	0.00	6.78	84.22	0.00	66.97	84.43	84.09	83.75	83.42	83.08	82.74	82.40	82.07	81.73	81.39	81.05	80.72	80.38	80.04
9.50	0.00	6.50	84.00	0.00	73.76	84.21	83.86	83.51	83.16	82.81	82.46	82.11	81.76	81.41	81.06	80.72	80.37	80.02	79.67
10.00	0.00	6.22	83.78	0.00	81.17	83.98	83.62	83.25	82.89	82.53	82.16	81.80	81.44	81.07	80.71	80.35	79.98	79.62	79.26
10.50	0.00	5.94	83.56	0.00	89.28	83.73	83.35	82.97	82.59	82.21	81.83	81.46	81.08	80.70	80.32	79.94	79.56	79.18	78.81
11.00	0.00	5.65	83.35	0.00	98.21	83.45	83.05	82.66	82.26	81.87	81.47	81.08	80.68	80.29	79.89	79.50	79.10	78.71	78.31
11.50	0.00	5.37	83.13	0.00	108.07	83.14	82.72	82.31	81.90	81.48	81.07	80.66	80.24	79.83	79.42	79.00	78.59	78.18	77.76
12.00	0.00	5.09	82.91	0.00	119.03	82.79	82.36	81.92	81.49	81.06	80.62	80.19	79.76	79.32	78.89	78.46	78.02	77.59	77.16
12.50	0.00	4.81	82.69	0.00	131.27	82.41	81.95	81.49	81.04	80.58	80.13	79.67	79.22	78.76	78.30	77.85	77.39	76.94	76.48
13.00	0.00	4.52	82.48	0.00	145.05	81.97	81.49	81.01	80.53	80.05	79.57	79.09	78.60	78.12	77.64	77.16	76.68	76.20	75.72
13.50	0.00	4.24	82.26	0.00	160.66	81.48	80.97	80.46	79.95	79.44	78.93	78.42	77.91	77.40	76.89	76.38	75.87	75.36	74.85
14.00	0.00	3.96	82.04	0.00	178.49	80.92	80.38	79.84	79.29	78.75	78.21	77.66	77.12	76.58	76.04	75.49	74.95	74.41	73.86
14.50	0.00	3.68	81.82	0.00	199.07	80.28	79.70	79.11	78.53	77.95	77.37	76.79	76.21	75.63	75.05	74.47	73.89	73.30	72.72
15.00	0.00	3.39	81.61	0.00	223.07	79.52	78.90	78.27	77.65	77.02	76.40	75.77	75.15	74.52	73.90	73.27	72.64	72.02	71.39

COMBUSTION EFFICIENCY TABLE FOR NATURAL GAS

Properties of Natural Gas:

Molecular Weight: $16.7 \frac{\text{lb}}{\text{lbm mole}}$

Specific Heat: $0.487 \frac{\text{BTU}}{\text{lb R}}$

Enthalpy of Formation: $-2537 \frac{\text{BTU}}{\text{lb}}$

Higher Heating Value: $21869.0 \frac{\text{BTU}}{\text{lb}}$

Dry Products of Combustion						COMBUSTION EFFICIENCY *(Efficiencies are listed by flue gas temperature less surrounding temperature, °F)*													
$\%O_2$	$\%CO$	$\%CO_2$	$\%N_2$	$\%SO_2$	% Excess Air	310	320	330	340	350	360	370	380	390	400	410	420	430	440
0.00	0.00	11.87	88.13	0.00	0.00	83.54	83.32	83.11	82.90	82.68	82.47	82.25	82.04	81.83	81.61	81.40	81.19	80.97	80.76
0.50	0.00	11.59	87.91	0.00	2.18	83.41	83.20	82.98	82.76	82.54	82.32	82.11	81.89	81.67	81.45	81.23	81.02	80.80	80.58
1.00	0.00	11.30	87.70	0.00	4.47	83.28	83.06	82.84	82.62	82.39	82.17	81.95	81.73	81.51	81.28	81.06	80.84	80.62	80.39
1.50	0.00	11.02	87.48	0.00	6.87	83.14	82.92	82.69	82.46	82.24	82.01	81.79	81.56	81.33	81.11	80.88	80.65	80.43	80.20
2.00	0.00	10.74	87.26	0.00	9.40	83.00	82.77	82.54	82.31	82.07	81.84	81.61	81.38	81.15	80.92	80.69	80.46	80.23	79.99
2.50	0.00	10.46	87.04	0.00	12.07	82.85	82.61	82.37	82.14	81.90	81.67	81.43	81.19	80.96	80.72	80.49	80.25	80.01	79.78
3.00	0.00	10.17	86.83	0.00	14.89	82.69	82.44	82.20	81.96	81.72	81.48	81.24	81.00	80.76	80.51	80.27	80.03	79.79	79.55
3.50	0.00	9.89	86.61	0.00	17.86	82.52	82.27	82.02	81.77	81.53	81.28	81.03	80.79	80.54	80.29	80.05	79.80	79.55	79.31
4.00	0.00	9.61	86.39	0.00	21.01	82.33	82.08	81.83	81.58	81.32	81.07	80.82	80.57	80.31	80.06	79.81	79.56	79.30	79.05
4.50	0.00	9.33	86.17	0.00	24.36	82.14	81.88	81.63	81.37	81.11	80.85	80.59	80.33	80.07	79.81	79.56	79.30	79.04	78.78
5.00	0.00	9.04	85.96	0.00	27.91	81.94	81.67	81.41	81.14	80.88	80.61	80.35	80.08	79.82	79.55	79.29	79.02	78.76	78.49
5.50	0.00	8.76	85.74	0.00	31.69	81.72	81.45	81.18	80.91	80.63	80.36	80.09	79.82	79.55	79.27	79.00	78.73	78.46	78.18
6.00	0.00	8.48	85.52	0.00	35.72	81.49	81.21	80.93	80.65	80.37	80.09	79.81	79.53	79.26	78.98	78.70	78.42	78.14	77.86
6.50	0.00	8.20	85.30	0.00	40.03	81.25	80.96	80.67	80.38	80.10	79.81	79.52	79.23	78.94	78.66	78.37	78.08	77.79	77.51
7.00	0.00	7.91	85.09	0.00	44.65	80.98	80.69	80.39	80.09	79.80	79.50	79.20	78.91	78.61	78.32	78.02	77.72	77.43	77.13
7.50	0.00	7.63	84.87	0.00	49.61	80.70	80.39	80.09	79.78	79.48	79.17	78.87	78.56	78.26	77.95	77.64	77.34	77.03	76.73
8.00	0.00	7.35	84.65	0.00	54.95	80.39	80.08	79.76	79.45	79.13	78.82	78.50	78.19	77.87	77.56	77.24	76.93	76.61	76.29
8.50	0.00	7.07	84.43	0.00	60.72	80.06	79.74	79.41	79.08	78.76	78.43	78.11	77.78	77.46	77.13	76.80	76.48	76.15	75.83
9.00	0.00	6.78	84.22	0.00	66.97	79.70	79.37	79.03	78.69	78.35	78.02	77.68	77.34	77.01	76.67	76.33	75.99	75.66	75.32
9.50	0.00	6.50	84.00	0.00	73.76	79.32	78.97	78.62	78.27	77.92	77.57	77.22	76.87	76.52	76.17	75.82	75.47	75.12	74.77
10.00	0.00	6.22	83.78	0.00	81.17	78.89	78.53	78.16	77.80	77.44	77.07	76.71	76.35	75.98	75.62	75.26	74.89	74.53	74.17
10.50	0.00	5.94	83.56	0.00	89.28	78.43	78.05	77.67	77.29	76.91	76.53	76.16	75.78	75.40	75.02	74.64	74.26	73.89	73.51
11.00	0.00	5.65	83.35	0.00	98.21	77.92	77.52	77.13	76.73	76.34	75.94	75.55	75.15	74.76	74.36	73.97	73.57	73.18	72.78
11.50	0.00	5.37	83.13	0.00	108.07	77.35	76.94	76.53	76.11	75.70	75.29	74.87	74.46	74.05	73.63	73.22	72.81	72.39	71.98
12.00	0.00	5.09	82.91	0.00	119.03	76.72	76.29	75.86	75.42	74.99	74.56	74.12	73.69	73.26	72.82	72.39	71.96	71.52	71.09
12.50	0.00	4.81	82.69	0.00	131.27	76.02	75.57	75.11	74.66	74.20	73.74	73.29	72.83	72.38	71.92	71.46	71.01	70.55	70.10
13.00	0.00	4.52	82.48	0.00	145.05	75.24	74.75	74.27	73.79	73.31	72.83	72.35	71.87	71.38	70.90	70.42	69.94	69.46	68.98
13.50	0.00	4.24	82.26	0.00	160.66	74.34	73.83	73.32	72.81	72.30	71.79	71.28	70.77	70.26	69.75	69.24	68.73	68.22	67.71
14.00	0.00	3.96	82.04	0.00	178.49	73.32	72.78	72.23	71.69	71.15	70.61	70.06	69.52	68.98	68.43	67.89	67.35	66.80	66.26
14.50	0.00	3.68	81.82	0.00	199.07	72.14	71.56	70.98	70.40	69.82	69.24	68.66	68.08	67.50	66.91	66.33	65.75	65.17	64.59
15.00	0.00	3.39	81.61	0.00	223.07	70.77	70.14	69.52	68.89	68.27	67.64	67.02	66.39	65.77	65.14	64.52	63.89	63.27	62.64

COMBUSTION EFFICIENCY TABLE FOR NATURAL GAS

Properties of Natural Gas:

Molecular Weight: $16.7 \frac{lb}{lbm\ mole}$

Specific Heat: $0.487 \frac{BTU}{lb\ R}$

Enthalpy of Formation: $-2537 \frac{BTU}{lb}$

Higher Heating Value: $21869.0 \frac{BTU}{lb}$

Dry Products of Combustion						COMBUSTION EFFICIENCY *(Efficiencies are listed by flue gas temperature less surrounding temperature, °F)*													
$\%O_2$	$\%CO$	$\%CO_2$	$\%N_2$	$\%SO_2$	% Excess Air	450	460	470	480	490	500	510	520	530	540	550	560	570	580
0.00	0.00	11.87	88.13	0.00	0.00	80.54	80.33	80.12	79.90	79.69	79.47	79.26	79.05	78.83	78.62	78.40	78.19	77.98	77.76
0.50	0.00	11.59	87.91	0.00	2.18	80.36	80.14	79.93	79.71	79.49	79.27	79.06	78.84	78.62	78.40	78.18	77.97	77.75	77.53
1.00	0.00	11.30	87.70	0.00	4.47	80.17	79.95	79.73	79.51	79.28	79.06	78.84	78.62	78.40	78.17	77.95	77.73	77.51	77.29
1.50	0.00	11.02	87.48	0.00	6.87	79.97	79.75	79.52	79.29	79.07	78.84	78.61	78.39	78.16	77.93	77.71	77.48	77.25	77.03
2.00	0.00	10.74	87.26	0.00	9.40	79.76	79.53	79.30	79.07	78.84	78.61	78.38	78.14	77.91	77.68	77.45	77.22	76.99	76.76
2.50	0.00	10.46	87.04	0.00	12.07	79.54	79.31	79.07	78.83	78.60	78.36	78.12	77.89	77.65	77.42	77.18	76.94	76.71	76.47
3.00	0.00	10.17	86.83	0.00	14.89	79.31	79.07	78.82	78.58	78.34	78.10	77.86	77.62	77.38	77.14	76.89	76.65	76.41	76.17
3.50	0.00	9.89	86.61	0.00	17.86	79.06	78.81	78.57	78.32	78.07	77.83	77.58	77.33	77.09	76.84	76.59	76.35	76.10	75.85
4.00	0.00	9.61	86.39	0.00	21.01	78.80	78.55	78.29	78.04	77.79	77.54	77.28	77.03	76.78	76.52	76.27	76.02	75.77	75.51
4.50	0.00	9.33	86.17	0.00	24.36	78.52	78.26	78.00	77.74	77.49	77.23	76.97	76.71	76.45	76.19	75.93	75.67	75.42	75.16
5.00	0.00	9.04	85.96	0.00	27.91	78.23	77.96	77.69	77.43	77.16	76.90	76.63	76.37	76.10	75.84	75.57	75.31	75.04	74.78
5.50	0.00	8.76	85.74	0.00	31.69	77.91	77.64	77.37	77.09	76.82	76.55	76.28	76.01	75.73	75.46	75.19	74.92	74.64	74.37
6.00	0.00	8.48	85.52	0.00	35.72	77.58	77.30	77.02	76.74	76.46	76.18	75.90	75.62	75.34	75.06	74.78	74.50	74.22	73.94
6.50	0.00	8.20	85.30	0.00	40.03	77.22	76.93	76.64	76.36	76.07	75.78	75.49	75.20	74.92	74.63	74.34	74.05	73.77	73.48
7.00	0.00	7.91	85.09	0.00	44.65	76.84	76.54	76.24	75.95	75.65	75.35	75.06	74.76	74.47	74.17	73.87	73.58	73.28	72.98
7.50	0.00	7.63	84.87	0.00	49.61	76.42	76.12	75.81	75.51	75.20	74.90	74.59	74.29	73.98	73.68	73.37	73.06	72.76	72.45
8.00	0.00	7.35	84.65	0.00	54.95	75.98	75.66	75.35	75.03	74.72	74.40	74.09	73.77	73.46	73.14	72.83	72.51	72.20	71.88
8.50	0.00	7.07	84.43	0.00	60.72	75.50	75.17	74.85	74.52	74.20	73.87	73.55	73.22	72.89	72.57	72.24	71.92	71.59	71.26
9.00	0.00	6.78	84.22	0.00	66.97	74.98	74.64	74.31	73.97	73.63	73.29	72.96	72.62	72.28	71.95	71.61	71.27	70.93	70.60
9.50	0.00	6.50	84.00	0.00	73.76	74.42	74.07	73.72	73.37	73.02	72.67	72.32	71.97	71.62	71.27	70.92	70.57	70.22	69.87
10.00	0.00	6.22	83.78	0.00	81.17	73.80	73.44	73.07	72.71	72.35	71.98	71.62	71.26	70.89	70.53	70.17	69.80	69.44	69.08
10.50	0.00	5.94	83.56	0.00	89.28	73.13	72.75	72.37	71.99	71.61	71.24	70.86	70.48	70.10	69.72	69.34	68.96	68.59	68.21
11.00	0.00	5.65	83.35	0.00	98.21	72.39	71.99	71.60	71.20	70.81	70.41	70.02	69.62	69.23	68.83	68.44	68.04	67.65	67.25
11.50	0.00	5.37	83.13	0.00	108.07	71.57	71.15	70.74	70.33	69.92	69.50	69.09	68.68	68.26	67.85	67.44	67.02	66.61	66.20
12.00	0.00	5.09	82.91	0.00	119.03	70.66	70.22	69.79	69.36	68.92	68.49	68.06	67.62	67.19	66.76	66.32	65.89	65.46	65.02
12.50	0.00	4.81	82.69	0.00	131.27	69.64	69.18	68.73	68.27	67.82	67.36	66.90	66.45	65.99	65.54	65.08	64.63	64.17	63.71
13.00	0.00	4.52	82.48	0.00	145.05	68.50	68.02	67.53	67.05	66.57	66.09	65.61	65.13	64.65	64.16	63.68	63.20	62.72	62.24
13.50	0.00	4.24	82.26	0.00	160.66	67.20	66.69	66.18	65.67	65.16	64.65	64.14	63.63	63.12	62.61	62.10	61.59	61.08	60.57
14.00	0.00	3.96	82.04	0.00	178.49	65.72	65.18	64.63	64.09	63.55	63.00	62.46	61.92	61.37	60.83	60.29	59.75	59.20	58.66
14.50	0.00	3.68	81.82	0.00	199.07	64.01	63.43	62.85	62.27	61.69	61.10	60.52	59.94	59.36	58.78	58.20	57.62	57.04	56.46
15.00	0.00	3.39	81.61	0.00	223.07	62.02	61.39	60.77	60.14	59.52	58.89	58.26	57.64	57.01	56.39	55.76	55.14	54.51	53.89

COMBUSTION EFFICIENCY TABLE FOR NATURAL GAS

Properties of Natural Gas:

Molecular Weight: 16.7 $\frac{\text{lb}}{\text{lbm mole}}$

Specific Heat: 0.487 $\frac{\text{BTU}}{\text{lb R}}$

Enthalpy of Formation: -2537 $\frac{\text{BTU}}{\text{lb}}$

Higher Heating Value: 21869.0 $\frac{\text{BTU}}{\text{lb}}$

Dry Products of Combustion						COMBUSTION EFFICIENCY *(Efficiencies are listed by flue gas temperature less surrounding temperature, °F)*													
$\%O_2$	$\%CO$	$\%CO_2$	$\%N_2$	$\%SO_2$	% Excess Air	590	600	610	620	630	640	650	660	670	680	690	700	710	720
0.00	0.00	11.87	88.13	0.00	0.00	77.55	77.34	77.12	76.91	76.69	76.48	76.27	76.05	75.84	75.62	75.41	75.20	74.98	74.77
0.50	0.00	11.59	87.91	0.00	2.18	77.31	77.09	76.88	76.66	76.44	76.22	76.01	75.79	75.57	75.35	75.13	74.92	74.70	74.48
1.00	0.00	11.30	87.70	0.00	4.47	77.06	76.84	76.62	76.40	76.17	75.95	75.73	75.51	75.29	75.06	74.84	74.62	74.40	74.18
1.50	0.00	11.02	87.48	0.00	6.87	76.80	76.58	76.35	76.12	75.90	75.67	75.44	75.22	74.99	74.76	74.54	74.31	74.08	73.86
2.00	0.00	10.74	87.26	0.00	9.40	76.53	76.29	76.06	75.83	75.60	75.37	75.14	74.91	74.68	74.45	74.21	73.98	73.75	73.52
2.50	0.00	10.46	87.04	0.00	12.07	76.24	76.00	75.76	75.53	75.29	75.05	74.82	74.58	74.35	74.11	73.87	73.64	73.40	73.17
3.00	0.00	10.17	86.83	0.00	14.89	75.93	75.69	75.45	75.21	74.96	74.72	74.48	74.24	74.00	73.76	73.52	73.27	73.03	72.79
3.50	0.00	9.89	86.61	0.00	17.86	75.60	75.36	75.11	74.86	74.62	74.37	74.12	73.88	73.63	73.38	73.14	72.89	72.64	72.40
4.00	0.00	9.61	86.39	0.00	21.01	75.26	75.01	74.76	74.50	74.25	74.00	73.75	73.49	73.24	72.99	72.74	72.48	72.23	71.98
4.50	0.00	9.33	86.17	0.00	24.36	74.90	74.64	74.38	74.12	73.86	73.60	73.35	73.09	72.83	72.57	72.31	72.05	71.79	71.53
5.00	0.00	9.04	85.96	0.00	27.91	74.51	74.25	73.98	73.72	73.45	73.18	72.92	72.65	72.39	72.12	71.86	71.59	71.33	71.06
5.50	0.00	8.76	85.74	0.00	31.69	74.10	73.83	73.55	73.28	73.01	72.74	72.47	72.19	71.92	71.65	71.38	71.10	70.83	70.56
6.00	0.00	8.48	85.52	0.00	35.72	73.66	73.38	73.10	72.82	72.54	72.26	71.98	71.70	71.42	71.14	70.86	70.58	70.30	70.02
6.50	0.00	8.20	85.30	0.00	40.03	73.19	72.90	72.62	72.33	72.04	71.75	71.47	71.18	70.89	70.60	70.31	70.03	69.74	69.45
7.00	0.00	7.91	85.09	0.00	44.65	72.69	72.39	72.10	71.80	71.50	71.21	70.91	70.62	70.32	70.02	69.73	69.43	69.13	68.84
7.50	0.00	7.63	84.87	0.00	49.61	72.15	71.84	71.54	71.23	70.93	70.62	70.32	70.01	69.71	69.40	69.09	68.79	68.48	68.18
8.00	0.00	7.35	84.65	0.00	54.95	71.57	71.25	70.94	70.62	70.31	69.99	69.68	69.36	69.05	68.73	68.41	68.10	67.78	67.47
8.50	0.00	7.07	84.43	0.00	60.72	70.94	70.61	70.29	69.96	69.64	69.31	68.98	68.66	68.33	68.01	67.68	67.35	67.03	66.70
9.00	0.00	6.78	84.22	0.00	66.97	70.26	69.92	69.58	69.25	68.91	68.57	68.23	67.90	67.56	67.22	66.89	66.55	66.21	65.87
9.50	0.00	6.50	84.00	0.00	73.76	69.52	69.17	68.82	68.47	68.12	67.77	67.42	67.07	66.72	66.37	66.02	65.67	65.32	64.97
10.00	0.00	6.22	83.78	0.00	81.17	68.71	68.35	67.99	67.62	67.26	66.89	66.53	66.17	65.80	65.44	65.08	64.71	64.35	63.99
10.50	0.00	5.94	83.56	0.00	89.28	67.83	67.45	67.07	66.69	66.32	65.94	65.56	65.18	64.80	64.42	64.04	63.67	63.29	62.91
11.00	0.00	5.65	83.35	0.00	98.21	66.86	66.46	66.07	65.67	65.28	64.88	64.49	64.09	63.70	63.30	62.91	62.51	62.12	61.72
11.50	0.00	5.37	83.13	0.00	108.07	65.78	65.37	64.96	64.54	64.13	63.72	63.30	62.89	62.48	62.07	61.65	61.24	60.83	60.41
12.00	0.00	5.09	82.91	0.00	119.03	64.69	64.16	63.72	63.29	62.86	62.42	61.99	61.56	61.12	60.69	60.26	59.82	59.39	58.96
12.50	0.00	4.81	82.69	0.00	131.27	63.26	62.80	62.35	61.89	61.43	60.98	60.52	60.07	59.61	59.15	58.70	58.24	57.79	57.33
13.00	0.00	4.52	82.48	0.00	145.05	61.76	61.28	60.80	60.31	59.83	59.35	58.87	58.39	57.91	57.43	56.94	56.46	55.98	55.50
13.50	0.00	4.24	82.26	0.00	160.66	60.06	59.55	59.04	58.53	58.02	57.51	57.00	56.49	55.98	55.47	54.96	54.45	53.94	53.43
14.00	0.00	3.96	82.04	0.00	178.49	58.12	57.57	57.03	56.49	55.94	55.40	54.86	54.32	53.77	53.23	52.69	52.14	51.60	51.06
14.50	0.00	3.68	81.82	0.00	199.07	55.88	55.30	54.71	54.13	53.55	52.97	52.39	51.81	51.23	50.65	50.07	49.49	48.90	48.32
15.00	0.00	3.39	81.61	0.00	223.07	53.26	52.64	52.01	51.39	50.76	50.14	49.51	48.89	48.26	47.64	47.01	46.39	45.76	45.14

COMBUSTION EFFICIENCY TABLE FOR NATURAL GAS

Properties of Natural Gas:

Molecular Weight: $16.7 \frac{lb}{lbm\ mole}$

Specific Heat: $0.487 \frac{BTU}{lb\ R}$

Enthalpy of Formation: $-2537 \frac{BTU}{lb}$

Higher Heating Value: $21869.0 \frac{BTU}{lb}$

Dry Products of Combustion						COMBUSTION EFFICIENCY *(Efficiencies are listed by flue gas temperature less surrounding temperature, °F)*													
$\%O_2$	$\%CO$	$\%CO_2$	$\%N_2$	$\%SO_2$	% Excess Air	170	180	190	200	210	220	230	240	250	260	270	280	290	300
0.00	0.10	11.79	88.11	0.00	-0.21	86.40	86.18	85.97	85.76	85.54	85.33	85.12	84.90	84.69	84.48	84.26	84.05	83.84	83.62
0.50	0.10	11.51	87.89	0.00	1.96	86.33	86.11	85.89	85.67	85.46	85.24	85.02	84.80	84.59	84.37	84.15	83.93	83.72	83.50
1.00	0.10	11.23	87.67	0.00	4.23	86.25	86.03	85.81	85.59	85.36	85.14	84.92	84.70	84.48	84.26	84.03	83.81	83.59	83.37
1.50	0.10	10.94	87.46	0.00	6.63	86.17	85.95	85.72	85.49	85.27	85.04	84.82	84.59	84.36	84.14	83.91	83.69	83.46	83.23
2.00	0.10	10.66	87.24	0.00	9.15	86.09	85.86	85.63	85.40	85.17	84.94	84.70	84.47	84.24	84.01	83.78	83.55	83.32	83.09
2.50	0.10	10.38	87.02	0.00	11.80	86.00	85.77	85.53	85.29	85.06	84.82	84.59	84.35	84.12	83.88	83.65	83.41	83.17	82.94
3.00	0.10	10.10	86.80	0.00	14.61	85.91	85.67	85.43	85.19	84.95	84.71	84.46	84.22	83.98	83.74	83.50	83.26	83.02	82.78
3.50	0.10	9.81	86.59	0.00	17.57	85.81	85.56	85.32	85.07	84.83	84.58	84.33	84.09	83.84	83.59	83.35	83.10	82.86	82.61
4.00	0.10	9.53	86.37	0.00	20.70	85.71	85.46	85.20	84.95	84.70	84.45	84.20	83.94	83.69	83.44	83.19	82.94	82.68	82.43
4.50	0.10	9.25	86.15	0.00	24.03	85.60	85.34	85.08	84.82	84.57	84.31	84.05	83.79	83.53	83.27	83.02	82.76	82.50	82.24
5.00	0.10	8.97	85.93	0.00	27.56	85.48	85.22	84.95	84.69	84.42	84.16	83.89	83.63	83.36	83.10	82.83	82.57	82.31	82.04
5.50	0.10	8.68	85.72	0.00	31.32	85.36	85.09	84.81	84.54	84.27	84.00	83.73	83.46	83.18	82.91	82.64	82.37	82.10	81.83
6.00	0.10	8.40	85.50	0.00	35.33	85.23	84.95	84.67	84.39	84.11	83.83	83.55	83.27	82.99	82.71	82.43	82.16	81.88	81.60
6.50	0.10	8.12	85.28	0.00	39.62	85.08	84.80	84.51	84.22	83.94	83.65	83.36	83.08	82.79	82.50	82.21	81.93	81.64	81.35
7.00	0.10	7.84	85.06	0.00	44.21	84.93	84.64	84.34	84.05	83.75	83.46	83.16	82.86	82.57	82.27	81.98	81.68	81.39	81.09
7.50	0.10	7.55	84.85	0.00	49.14	84.77	84.47	84.16	83.86	83.55	83.25	82.94	82.64	82.33	82.03	81.72	81.42	81.12	80.81
8.00	0.10	7.27	84.63	0.00	54.44	84.59	84.28	83.97	83.65	83.34	83.02	82.71	82.39	82.08	81.77	81.45	81.14	80.82	80.51
8.50	0.10	6.99	84.41	0.00	60.17	84.41	84.08	83.76	83.43	83.11	82.78	82.46	82.13	81.81	81.48	81.16	80.83	80.51	80.18
9.00	0.10	6.71	84.19	0.00	66.38	84.20	83.86	83.53	83.19	82.86	82.52	82.18	81.85	81.51	81.17	80.84	80.50	80.17	79.83
9.50	0.10	6.42	83.98	0.00	73.12	83.98	83.63	83.28	82.93	82.58	82.23	81.89	81.54	81.19	80.84	80.49	80.14	79.79	79.45
10.00	0.10	6.14	83.76	0.00	80.47	83.74	83.37	83.01	82.65	82.29	81.92	81.56	81.20	80.84	80.48	80.11	79.75	79.39	79.03
10.50	0.10	5.86	83.54	0.00	88.52	83.47	83.09	82.72	82.34	81.96	81.58	81.21	80.83	80.45	80.08	79.70	79.32	78.94	78.57
11.00	0.10	5.58	83.32	0.00	97.38	83.18	82.78	82.39	82.00	81.60	81.21	80.82	80.42	80.03	79.64	79.24	78.85	78.46	78.06
11.50	0.10	5.29	83.11	0.00	107.15	82.86	82.44	82.03	81.62	81.21	80.80	80.39	79.97	79.56	79.15	78.74	78.33	77.92	77.51
12.00	0.10	5.01	82.89	0.00	118.01	82.50	82.07	81.63	81.20	80.77	80.34	79.91	79.48	79.04	78.61	78.18	77.75	77.32	76.89
12.50	0.10	4.73	82.67	0.00	130.14	82.10	81.64	81.19	80.73	80.28	79.83	79.37	78.92	78.47	78.01	77.56	77.10	76.65	76.20
13.00	0.10	4.45	82.45	0.00	143.78	81.65	81.17	80.69	80.21	79.73	79.25	78.77	78.29	77.81	77.34	76.86	76.38	75.90	75.42
13.50	0.10	4.16	82.24	0.00	159.22	81.14	80.63	80.12	79.61	79.11	78.60	78.09	77.58	77.08	76.57	76.06	75.55	75.05	74.54
14.00	0.10	3.88	82.02	0.00	176.86	80.56	80.02	79.48	78.94	78.40	77.86	77.32	76.78	76.24	75.70	75.16	74.62	74.08	73.54
14.50	0.10	3.60	81.80	0.00	197.19	79.88	79.31	78.73	78.15	77.57	77.00	76.42	75.84	75.26	74.69	74.11	73.53	72.95	72.38
15.00	0.10	3.32	81.58	0.00	220.88	79.10	78.48	77.86	77.24	76.62	76.00	75.38	74.75	74.13	73.51	72.89	72.27	71.65	71.03

COMBUSTION EFFICIENCY TABLE FOR NATURAL GAS

Properties of Natural Gas:

Molecular Weight: $16.7 \frac{lb}{lbm\ mole}$

Specific Heat: $0.487 \frac{BTU}{lb\ R}$

Enthalpy of Formation: $-2537 \frac{BTU}{lb}$

Higher Heating Value: $21869.0 \frac{BTU}{lb}$

Dry Products of Combustion						COMBUSTION EFFICIENCY *(Efficiencies are listed by flue gas temperature less surrounding temperature, °F)*													
$\%O_2$	$\%CO$	$\%CO_2$	$\%N_2$	$\%SO_2$	% Excess Air	310	320	330	340	350	360	370	380	390	400	410	420	430	440
0.00	0.10	11.79	88.11	0.00	-0.21	83.41	83.20	82.98	82.77	82.56	82.34	82.13	81.92	81.70	81.49	81.27	81.06	80.85	80.63
0.50	0.10	11.51	87.89	0.00	1.96	83.28	83.06	82.85	82.63	82.41	82.19	81.98	81.76	81.54	81.32	81.11	80.89	80.67	80.45
1.00	0.10	11.23	87.67	0.00	4.23	83.15	82.93	82.70	82.48	82.26	82.04	81.82	81.60	81.37	81.15	80.93	80.71	80.49	80.27
1.50	0.10	10.94	87.46	0.00	6.63	83.01	82.78	82.55	82.33	82.10	81.88	81.65	81.42	81.20	80.97	80.75	80.52	80.29	80.07
2.00	0.10	10.66	87.24	0.00	9.15	82.86	82.63	82.40	82.17	81.94	81.71	81.47	81.24	81.01	80.78	80.55	80.32	80.09	79.86
2.50	0.10	10.38	87.02	0.00	11.80	82.70	82.47	82.23	82.00	81.76	81.52	81.29	81.05	80.82	80.58	80.35	80.11	79.88	79.64
3.00	0.10	10.10	86.80	0.00	14.61	82.54	82.30	82.06	81.82	81.57	81.33	81.09	80.85	80.61	80.37	80.13	79.89	79.65	79.41
3.50	0.10	9.81	86.59	0.00	17.57	82.36	82.12	81.87	81.62	81.38	81.13	80.89	80.64	80.39	80.15	79.90	79.65	79.41	79.16
4.00	0.10	9.53	86.37	0.00	20.70	82.18	81.93	81.68	81.42	81.17	80.92	80.67	80.42	80.16	79.91	79.66	79.41	79.15	78.90
4.50	0.10	9.25	86.15	0.00	24.03	81.98	81.73	81.47	81.21	80.95	80.69	80.43	80.18	79.92	79.66	79.40	79.14	78.89	78.63
5.00	0.10	8.97	85.93	0.00	27.66	81.78	81.51	81.25	80.98	80.72	80.45	80.19	79.92	79.66	79.39	79.13	78.86	78.60	78.34
5.50	0.10	8.68	85.72	0.00	31.32	81.55	81.28	81.01	80.74	80.47	80.20	79.93	79.65	79.38	79.11	78.84	78.57	78.30	78.02
6.00	0.10	8.40	85.50	0.00	35.33	81.32	81.04	80.76	80.48	80.20	79.92	79.64	79.37	79.09	78.81	78.53	78.25	77.97	77.69
6.50	0.10	8.12	85.28	0.00	39.62	81.07	80.78	80.49	80.21	79.92	79.63	79.35	79.06	78.77	78.48	78.20	77.91	77.62	77.34
7.00	0.10	7.84	85.06	0.00	44.21	80.80	80.50	80.21	79.91	79.62	79.32	79.02	78.73	78.43	78.14	77.84	77.55	77.25	76.96
7.50	0.10	7.55	84.85	0.00	49.14	80.51	80.20	79.90	79.59	79.29	78.98	78.68	78.38	78.07	77.77	77.46	77.16	76.85	76.55
8.00	0.10	7.27	84.63	0.00	54.44	80.19	79.88	79.57	79.25	78.94	78.62	78.31	78.00	77.68	77.37	77.05	76.74	76.42	76.11
8.50	0.10	6.99	84.41	0.00	60.17	79.86	79.53	79.21	78.88	78.56	78.23	77.91	77.58	77.26	76.93	76.61	76.28	75.96	75.64
9.00	0.10	6.71	84.19	0.00	66.38	79.49	79.16	78.82	78.48	78.15	77.81	77.48	77.14	76.80	76.47	76.13	75.79	75.46	75.12
9.50	0.10	6.42	83.98	0.00	73.12	79.10	78.75	78.40	78.05	77.70	77.35	77.00	76.66	76.31	75.96	75.61	75.26	74.91	74.56
10.00	0.10	6.14	83.76	0.00	80.47	78.66	78.30	77.94	77.58	77.21	76.85	76.49	76.13	75.77	75.40	75.04	74.68	74.32	73.95
10.50	0.10	5.86	83.54	0.00	88.52	78.19	77.81	77.44	77.06	76.68	76.30	75.93	75.55	75.17	74.80	74.42	74.04	73.67	73.29
11.00	0.10	5.58	83.32	0.00	97.38	77.67	77.28	76.88	76.49	76.10	75.70	75.31	74.92	74.52	74.13	73.74	73.34	72.95	72.56
11.50	0.10	5.29	83.11	0.00	107.15	77.09	76.68	76.27	75.86	75.45	75.04	74.63	74.21	73.80	73.39	72.98	72.57	72.16	71.75
12.00	0.10	5.01	82.89	0.00	118.01	76.46	76.02	75.59	75.16	74.73	74.30	73.87	73.44	73.00	72.57	72.14	71.71	71.28	70.85
12.50	0.10	4.73	82.67	0.00	130.14	75.74	75.29	74.83	74.38	73.93	73.47	73.02	72.57	72.11	71.66	71.20	70.75	70.30	69.84
13.00	0.10	4.45	82.45	0.00	143.78	74.94	74.46	73.98	73.50	73.02	72.55	72.07	71.59	71.11	70.63	70.15	69.67	69.19	68.71
13.50	0.10	4.16	82.24	0.00	159.22	74.03	73.52	73.02	72.51	72.00	71.49	70.99	70.48	69.97	69.47	68.96	68.45	67.94	67.44
14.00	0.10	3.88	82.02	0.00	176.86	73.00	72.46	71.92	71.38	70.84	70.30	69.76	69.22	68.68	68.14	67.60	67.06	66.52	65.98
14.50	0.10	3.60	81.80	0.00	197.19	71.80	71.22	70.64	70.07	69.49	68.91	68.33	67.76	67.18	66.60	66.02	65.45	64.87	64.29
15.00	0.10	3.32	81.58	0.00	220.88	70.41	69.79	69.16	68.54	67.92	67.30	66.68	66.06	65.44	64.82	64.19	63.57	62.95	62.33

COMBUSTION EFFICIENCY TABLE FOR NATURAL GAS

Properties of Natural Gas:

Molecular Weight: $16.7 \frac{\text{lb}}{\text{lbm mole}}$

Specific Heat: $0.487 \frac{\text{BTU}}{\text{lb R}}$

Enthalpy of Formation: $-2537 \frac{\text{BTU}}{\text{lb}}$

Higher Heating Value: $21869.0 \frac{\text{BTU}}{\text{lb}}$

Dry Products of Combustion						COMBUSTION EFFICIENCY *(Efficiencies are listed by flue gas temperature less surrounding temperature, °F)*													
$\%O_2$	$\%CO$	$\%CO_2$	$\%N_2$	$\%SO_2$	% Excess Air	450	460	470	480	490	500	510	520	530	540	550	560	570	580
0.00	0.10	11.79	88.11	0.00	-0.21	80.42	80.21	79.99	79.78	79.57	79.35	79.14	78.93	78.71	78.50	78.29	78.07	77.86	77.65
0.50	0.10	11.51	87.89	0.00	1.96	80.24	80.02	79.80	79.58	79.37	79.15	78.93	78.72	78.50	78.28	78.06	77.85	77.63	77.41
1.00	0.10	11.23	87.67	0.00	4.23	80.04	79.82	79.60	79.38	79.16	78.94	78.71	78.49	78.27	78.05	77.83	77.61	77.38	77.16
1.50	0.10	10.94	87.46	0.00	6.63	79.84	79.62	79.39	79.16	78.94	78.71	78.49	78.26	78.03	77.81	77.58	77.36	77.13	76.90
2.00	0.10	10.66	87.24	0.00	9.15	79.63	79.40	79.17	78.94	78.71	78.48	78.24	78.01	77.78	77.55	77.32	77.09	76.86	76.63
2.50	0.10	10.38	87.02	0.00	11.80	79.40	79.17	78.93	78.70	78.46	78.23	77.99	77.76	77.52	77.28	77.05	76.81	76.58	76.34
3.00	0.10	10.10	86.80	0.00	14.61	79.17	78.93	78.69	78.44	78.20	77.96	77.72	77.48	77.24	77.00	76.76	76.52	76.28	76.04
3.50	0.10	9.81	86.59	0.00	17.67	78.92	78.67	78.42	78.18	77.93	77.68	77.44	77.19	76.95	76.70	76.45	76.21	75.96	75.71
4.00	0.10	9.53	86.37	0.00	20.70	78.65	78.40	78.15	77.89	77.64	77.39	77.14	76.89	76.63	76.38	76.13	75.88	75.63	75.37
4.50	0.10	9.25	86.15	0.00	24.03	78.37	78.11	77.85	77.59	77.34	77.08	76.82	76.56	76.30	76.05	75.79	75.53	75.27	75.01
5.00	0.10	8.97	85.93	0.00	27.66	78.07	77.81	77.54	77.28	77.01	76.75	76.48	76.22	75.95	75.69	75.42	75.16	74.89	74.63
5.50	0.10	8.68	85.72	0.00	31.32	77.75	77.48	77.21	76.94	76.67	76.39	76.12	75.85	75.58	75.31	75.04	74.76	74.49	74.22
6.00	0.10	8.40	85.50	0.00	35.33	77.41	77.13	76.85	76.58	76.30	76.02	75.74	75.46	75.18	74.90	74.62	74.34	74.06	73.79
6.50	0.10	8.12	85.28	0.00	39.62	77.05	76.76	76.48	76.19	75.90	75.62	75.33	75.04	74.75	74.47	74.18	73.89	73.61	73.32
7.00	0.10	7.84	85.06	0.00	44.21	76.66	76.37	76.07	75.78	75.48	75.18	74.89	74.59	74.30	74.00	73.71	73.41	73.12	72.82
7.50	0.10	7.55	84.85	0.00	49.14	76.24	75.94	75.64	75.33	75.03	74.72	74.42	74.11	73.81	73.50	73.20	72.90	72.59	72.29
8.00	0.10	7.27	84.63	0.00	54.44	75.80	75.48	75.17	74.85	74.54	74.22	73.91	73.60	73.28	72.97	72.65	72.34	72.02	71.71
8.50	0.10	6.99	84.41	0.00	60.17	75.31	74.99	74.66	74.34	74.01	73.69	73.36	73.04	72.71	72.39	72.06	71.74	71.41	71.09
9.00	0.10	6.71	84.19	0.00	66.38	74.79	74.46	74.11	73.78	73.44	73.10	72.77	72.43	72.10	71.76	71.42	71.09	70.75	70.41
9.50	0.10	6.42	83.98	0.00	73.12	74.21	73.87	73.52	73.17	72.82	72.47	72.12	71.77	71.43	71.08	70.73	70.38	70.03	69.68
10.00	0.10	6.14	83.76	0.00	80.47	73.59	73.23	72.87	72.51	72.14	71.78	71.42	71.06	70.69	70.33	69.97	69.61	69.25	68.88
10.50	0.10	5.86	83.54	0.00	88.52	72.91	72.53	72.16	71.78	71.40	71.03	70.65	70.27	69.89	69.52	69.14	68.76	68.39	68.01
11.00	0.10	5.58	83.32	0.00	97.36	72.16	71.77	71.38	70.98	70.59	70.19	69.80	69.41	69.01	68.62	68.23	67.83	67.44	67.05
11.50	0.10	5.29	83.11	0.00	107.15	71.33	70.92	70.51	70.10	69.69	69.28	68.87	68.45	68.04	67.63	67.22	66.81	66.40	65.99
12.00	0.10	5.01	82.89	0.00	118.01	70.42	69.98	69.55	69.12	68.69	68.26	67.83	67.39	66.96	66.53	66.10	65.67	65.24	64.81
12.50	0.10	4.73	82.67	0.00	130.14	69.39	68.93	68.48	68.03	67.57	67.12	66.67	66.21	65.76	65.30	64.85	64.40	63.94	63.49
13.00	0.10	4.45	82.45	0.00	143.78	68.23	67.76	67.28	66.80	66.32	65.84	65.36	64.88	64.40	63.92	63.44	62.97	62.49	62.01
13.50	0.10	4.16	82.24	0.00	159.22	66.93	66.42	65.91	65.41	64.90	64.39	63.88	63.38	62.87	62.36	61.85	61.35	60.84	60.33
14.00	0.10	3.88	82.03	0.00	176.86	65.44	64.90	64.36	63.82	63.28	62.74	62.20	61.66	61.12	60.58	60.04	59.50	58.96	58.42
14.50	0.10	3.60	81.80	0.00	197.19	63.71	63.14	62.56	61.98	61.40	60.83	60.25	59.67	59.09	58.52	57.94	57.36	56.79	56.21
15.00	0.10	3.32	81.58	0.00	220.88	61.71	61.09	60.47	59.85	59.23	58.60	57.98	57.36	56.74	56.12	55.50	54.88	54.26	53.63

COMBUSTION EFFICIENCY TABLE FOR NATURAL GAS

Properties of Natural Gas:

Molecular Weight: $16.7 \frac{lb}{lbm\ mole}$

Specific Heat: $0.487 \frac{BTU}{lb\ R}$

Enthalpy of Formation: $-2537 \frac{BTU}{lb}$

Higher Heating Value: $21869.0 \frac{BTU}{lb}$

Dry Products of Combustion						COMBUSTION EFFICIENCY *(Efficiencies are listed by flue gas temperature less surrounding temperature, °F)*													
$\%O_2$	$\%CO$	$\%CO_2$	$\%N_2$	$\%SO_2$	% Excess Air	590	600	610	620	630	640	650	660	670	680	690	700	710	720
0.00	0.10	11.79	88.11	0.00	-0.21	77.43	77.22	77.01	76.79	76.58	76.37	76.15	75.94	75.72	75.51	75.30	75.08	74.87	74.66
0.50	0.10	11.51	87.89	0.00	1.96	77.19	76.98	76.76	76.54	76.32	76.11	75.89	75.67	75.45	75.24	75.02	74.80	74.58	74.37
1.00	0.10	11.23	87.67	0.00	4.23	76.94	76.72	76.50	76.28	76.05	75.83	75.61	75.39	75.17	74.95	74.72	74.50	74.28	74.06
1.50	0.10	10.94	87.46	0.00	6.63	76.68	76.45	76.22	76.00	75.77	75.55	75.32	75.09	74.87	74.64	74.42	74.19	73.96	73.74
2.00	0.10	10.66	87.24	0.00	9.15	76.40	76.17	75.94	75.71	75.48	75.24	75.01	74.78	74.55	74.32	74.09	73.86	73.63	73.40
2.50	0.10	10.38	87.02	0.00	11.80	76.11	75.87	75.63	75.40	75.16	74.93	74.69	74.46	74.22	73.98	73.75	73.51	73.28	73.04
3.00	0.10	10.10	86.80	0.00	14.61	75.80	75.55	75.31	75.07	74.83	74.59	74.35	74.11	73.87	73.63	73.39	73.15	72.91	72.67
3.50	0.10	9.81	86.59	0.00	17.57	75.47	75.22	74.98	74.73	74.48	74.24	73.99	73.74	73.50	73.25	73.01	72.76	72.51	72.27
4.00	0.10	9.53	86.37	0.00	20.70	75.12	74.87	74.62	74.37	74.11	73.86	73.61	73.36	73.11	72.85	72.60	72.35	72.10	71.85
4.50	0.10	9.25	86.15	0.00	24.03	74.75	74.50	74.24	73.98	73.72	73.46	73.21	72.95	72.69	72.43	72.17	71.92	71.66	71.40
5.00	0.10	8.97	85.93	0.00	27.56	74.36	74.10	73.84	73.57	73.31	73.04	72.78	72.51	72.25	71.98	71.72	71.45	71.19	70.92
5.50	0.10	8.68	85.72	0.00	31.32	73.95	73.68	73.41	73.13	72.86	72.59	72.32	72.05	71.78	71.51	71.23	70.96	70.69	70.42
6.00	0.10	8.40	85.50	0.00	35.33	73.51	73.23	72.95	72.67	72.39	72.11	71.83	71.55	71.27	71.00	70.72	70.44	70.16	69.88
6.50	0.10	8.12	85.28	0.00	39.62	73.03	72.75	72.46	72.17	71.89	71.60	71.31	71.03	70.74	70.45	70.16	69.88	69.59	69.30
7.00	0.10	7.84	85.06	0.00	44.21	72.53	72.23	71.94	71.64	71.34	71.05	70.75	70.46	70.16	69.87	69.57	69.28	68.98	68.69
7.50	0.10	7.55	84.85	0.00	49.14	71.98	71.68	71.37	71.07	70.76	70.46	70.16	69.85	69.55	69.24	68.94	68.63	68.33	68.02
8.00	0.10	7.27	84.63	0.00	54.44	71.40	71.08	70.77	70.45	70.14	69.82	69.51	69.20	68.88	68.57	68.25	67.94	67.62	67.31
8.50	0.10	6.99	84.41	0.00	60.17	70.76	70.44	70.11	69.79	69.46	69.14	68.81	68.49	68.16	67.84	67.51	67.19	66.87	66.54
9.00	0.10	6.71	84.19	0.00	66.38	70.08	69.74	69.41	69.07	68.73	68.40	68.06	67.72	67.39	67.05	66.71	66.38	66.04	65.71
9.50	0.10	6.42	83.98	0.00	73.12	69.33	68.98	68.64	68.29	67.94	67.59	67.24	66.89	66.54	66.19	65.85	65.50	65.15	64.80
10.00	0.10	6.14	83.76	0.00	80.47	68.52	68.16	67.80	67.43	67.07	66.71	66.35	65.98	65.62	65.26	64.90	64.54	64.17	63.81
10.50	0.10	5.86	83.54	0.00	88.52	67.63	67.25	66.88	66.50	66.12	65.75	65.37	64.99	64.61	64.24	63.86	63.48	63.11	62.73
11.00	0.10	5.58	83.32	0.00	97.38	66.65	66.26	65.87	65.47	65.08	64.69	64.29	63.90	63.51	63.11	62.72	62.33	61.93	61.54
11.50	0.10	5.29	83.11	0.00	107.15	65.57	65.16	64.75	64.34	63.93	63.52	63.11	62.69	62.28	61.87	61.46	61.05	60.64	60.23
12.00	0.10	5.01	82.89	0.00	118.01	64.37	63.94	63.51	63.08	62.65	62.22	61.79	61.35	60.92	60.49	60.06	59.63	59.20	58.77
12.50	0.10	4.73	82.67	0.00	130.14	63.03	62.58	62.13	61.67	61.22	60.77	60.31	59.86	59.40	58.95	58.50	58.04	57.59	57.13
13.00	0.10	4.45	82.45	0.00	143.78	61.53	61.05	60.57	60.09	59.61	59.13	58.65	58.18	57.70	57.22	56.74	56.26	55.78	55.30
13.50	0.10	4.16	82.24	0.00	159.22	59.82	59.32	58.81	58.30	57.79	57.29	56.78	56.27	55.76	55.26	54.75	54.24	53.73	53.23
14.00	0.10	3.88	82.02	0.00	176.86	57.88	57.34	56.80	56.26	55.72	55.18	54.64	54.10	53.56	53.02	52.48	51.94	51.40	50.86
14.50	0.10	3.60	81.80	0.00	197.19	55.63	55.05	54.48	53.90	53.32	52.74	52.17	51.59	51.01	50.43	49.86	49.28	48.70	48.12
15.00	0.10	3.32	81.58	0.00	220.88	53.01	52.39	51.77	51.15	50.53	49.91	49.29	48.67	48.04	47.42	46.80	46.18	45.56	44.94

COMBUSTION EFFICIENCY TABLE FOR NATURAL GAS

Properties of Natural Gas:

Molecular Weight: $16.7 \frac{lb}{lbm\ mole}$

Specific Heat: $0.487 \frac{BTU}{lb\ R}$

Enthalpy of Formation: $-2537 \frac{BTU}{lb}$

Higher Heating Value: $21869.0 \frac{BTU}{lb}$

Dry Products of Combustion						COMBUSTION EFFICIENCY *(Efficiencies are listed by flue gas temperature less surrounding temperature, °F)*													
$\%O_2$	$\%CO$	$\%CO_2$	$\%N_2$	$\%SO_2$	% Excess Air	170	180	190	200	210	220	230	240	250	260	270	280	290	300
0.00	0.50	11.48	88.02	0.00	-1.05	85.87	85.66	85.44	85.23	85.02	84.81	84.60	84.38	84.17	83.96	83.75	83.54	83.33	83.11
0.50	0.50	11.20	87.80	0.00	1.08	85.78	85.57	85.35	85.14	84.92	84.71	84.49	84.27	84.06	83.84	83.63	83.41	83.19	82.98
1.00	0.50	10.92	87.58	0.00	3.32	85.70	85.48	85.26	85.04	84.82	84.60	84.38	84.16	83.94	83.72	83.50	83.28	83.06	82.84
1.50	0.50	10.63	87.37	0.00	5.67	85.60	85.38	85.16	84.93	84.71	84.48	84.26	84.03	83.81	83.59	83.36	83.14	82.91	82.69
2.00	0.50	10.35	87.15	0.00	8.14	85.51	85.28	85.05	84.82	84.59	84.36	84.13	83.90	83.68	83.45	83.22	82.99	82.76	82.53
2.50	0.50	10.07	86.93	0.00	10.75	85.40	85.17	84.94	84.70	84.47	84.24	84.00	83.77	83.53	83.30	83.07	82.83	82.60	82.37
3.00	0.50	9.79	86.71	0.00	13.50	85.30	85.06	84.82	84.58	84.34	84.10	83.86	83.63	83.39	83.15	82.91	82.67	82.43	82.19
3.50	0.50	9.50	86.50	0.00	16.40	85.18	84.94	84.69	84.45	84.21	83.96	83.72	83.47	83.23	82.99	82.74	82.50	82.25	82.01
4.00	0.50	9.22	86.28	0.00	19.47	85.06	84.81	84.56	84.31	84.06	83.81	83.56	83.31	83.06	82.81	82.56	82.31	82.06	81.81
4.50	0.50	8.94	86.06	0.00	22.73	84.93	84.68	84.42	84.17	83.91	83.65	83.40	83.14	82.89	82.63	82.38	82.12	81.86	81.61
5.00	0.50	8.66	85.84	0.00	26.19	84.80	84.54	84.27	84.01	83.75	83.49	83.22	82.96	82.70	82.44	82.18	81.91	81.65	81.39
5.50	0.50	8.37	85.63	0.00	29.87	84.65	84.38	84.11	83.85	83.58	83.31	83.04	82.77	82.50	82.23	81.96	81.69	81.43	81.16
6.00	0.50	8.09	85.41	0.00	33.79	84.50	84.22	83.95	83.67	83.39	83.12	82.84	82.57	82.29	82.01	81.74	81.46	81.18	80.91
6.50	0.50	7.81	85.19	0.00	37.98	84.33	84.05	83.77	83.48	83.20	82.91	82.63	82.35	82.06	81.78	81.50	81.21	80.93	80.64
7.00	0.50	7.53	84.97	0.00	42.46	84.16	83.87	83.57	83.28	82.99	82.70	82.40	82.11	81.82	81.53	81.24	80.94	80.65	80.36
7.50	0.50	7.24	84.76	0.00	47.27	83.97	83.67	83.37	83.07	82.76	82.46	82.16	81.86	81.56	81.26	80.96	80.66	80.36	80.06
8.00	0.50	6.96	84.54	0.00	52.44	83.77	83.45	83.14	82.83	82.52	82.21	81.90	81.59	81.28	80.97	80.66	80.35	80.04	79.73
8.50	0.50	6.68	84.32	0.00	58.02	83.55	83.23	82.90	82.58	82.26	81.94	81.62	81.30	80.98	80.66	80.34	80.02	79.70	79.38
9.00	0.50	6.40	84.10	0.00	64.05	83.31	82.98	82.64	82.31	81.98	81.65	81.32	80.98	80.65	80.32	79.99	79.66	79.33	78.99
9.50	0.50	6.11	83.89	0.00	70.61	83.05	82.71	82.36	82.02	81.67	81.33	80.99	80.64	80.30	79.95	79.61	79.27	78.92	78.58
10.00	0.50	5.83	83.67	0.00	77.74	82.77	82.41	82.06	81.70	81.34	80.98	80.63	80.27	79.91	79.56	79.20	78.84	78.48	78.13
10.50	0.50	5.55	83.45	0.00	85.55	82.46	82.09	81.72	81.35	80.98	80.61	80.23	79.86	79.49	79.12	78.75	78.38	78.00	77.63
11.00	0.50	5.27	83.23	0.00	94.12	82.13	81.74	81.35	80.96	80.58	80.19	79.80	79.42	79.03	78.64	78.25	77.87	77.48	77.09
11.50	0.50	4.98	83.02	0.00	103.57	81.76	81.35	80.95	80.54	80.14	79.73	79.33	78.92	78.52	78.11	77.71	77.30	76.90	76.49
12.00	0.50	4.70	82.80	0.00	114.05	81.34	80.92	80.50	80.07	79.65	79.22	78.80	78.37	77.95	77.53	77.10	76.68	76.25	75.83
12.50	0.50	4.42	82.58	0.00	125.73	80.88	80.44	79.99	79.55	79.10	78.66	78.21	77.76	77.32	76.87	76.43	75.98	75.54	75.09
13.00	0.50	4.14	82.36	0.00	138.83	80.37	79.90	79.43	78.96	78.49	78.02	77.55	77.08	76.61	76.14	75.67	75.20	74.73	74.26
13.50	0.50	3.85	82.15	0.00	153.64	79.79	79.29	78.79	78.30	77.80	77.30	76.80	76.31	75.81	75.31	74.82	74.32	73.82	73.32
14.00	0.50	3.57	81.93	0.00	170.50	79.12	78.60	78.07	77.54	77.01	76.48	75.95	75.43	74.90	74.37	73.84	73.31	72.79	72.26
14.50	0.50	3.29	81.71	0.00	189.88	78.36	77.80	77.23	76.67	76.11	75.54	74.98	74.41	73.85	73.29	72.72	72.16	71.59	71.03
15.00	0.50	3.01	81.49	0.00	212.37	77.48	76.87	76.27	75.66	75.06	74.45	73.85	73.24	72.63	72.03	71.42	70.82	70.21	69.61

COMBUSTION EFFICIENCY TABLE FOR NATURAL GAS

Properties of Natural Gas:

Molecular Weight: $16.7 \frac{lb}{lbm\ mole}$

Specific Heat: $0.487 \frac{BTU}{lb\ R}$

Enthalpy of Formation: $-2537 \frac{BTU}{lb}$

Higher Heating Value: $21869.0 \frac{BTU}{lb}$

Dry Products of Combustion						COMBUSTION EFFICIENCY *(Efficiencies are listed by flue gas temperature less surrounding temperature, °F)*													
$\%O_2$	$\%CO$	$\%CO_2$	$\%N_2$	$\%SO_2$	% Excess Air	310	320	330	340	350	360	370	380	390	400	410	420	430	440
0.00	0.50	11.48	88.02	0.00	-1.05	82.90	82.69	82.48	82.27	82.05	81.84	81.63	81.42	81.21	80.99	80.78	80.57	80.36	80.15
0.50	0.50	11.20	87.80	0.00	1.08	82.76	82.55	82.33	82.11	81.90	81.68	81.47	81.25	81.04	80.82	80.60	80.39	80.17	79.96
1.00	0.50	10.92	87.58	0.00	3.32	82.62	82.40	82.18	81.96	81.74	81.52	81.30	81.08	80.86	80.64	80.42	80.20	79.98	79.76
1.50	0.50	10.63	87.37	0.00	5.67	82.46	82.24	82.02	81.79	81.57	81.34	81.12	80.89	80.67	80.44	80.22	80.00	79.77	79.55
2.00	0.50	10.35	87.15	0.00	8.14	82.30	82.07	81.84	81.62	81.39	81.16	80.93	80.70	80.47	80.24	80.01	79.78	79.56	79.33
2.50	0.50	10.07	86.93	0.00	10.75	82.13	81.90	81.67	81.43	81.20	80.96	80.73	80.50	80.26	80.03	79.80	79.56	79.33	79.10
3.00	0.50	9.79	86.71	0.00	13.50	81.95	81.72	81.48	81.24	81.00	80.76	80.52	80.28	80.04	79.81	79.57	79.33	79.09	78.85
3.50	0.50	9.50	86.50	0.00	16.40	81.76	81.52	81.28	81.03	80.79	80.54	80.30	80.06	79.81	79.57	79.32	79.08	78.84	78.59
4.00	0.50	9.22	86.28	0.00	19.47	81.56	81.31	81.06	80.82	80.57	80.32	80.07	79.82	79.57	79.32	79.07	78.82	78.57	78.32
4.50	0.50	8.94	86.06	0.00	22.73	81.35	81.10	80.84	80.59	80.33	80.07	79.82	79.56	79.31	79.05	78.79	78.54	78.28	78.03
5.00	0.50	8.66	85.84	0.00	26.19	81.13	80.86	80.60	80.34	80.08	79.82	79.55	79.29	79.03	78.77	78.51	78.24	77.98	77.72
5.50	0.50	8.37	85.63	0.00	29.87	80.89	80.62	80.35	80.08	79.81	79.54	79.27	79.01	78.74	78.47	78.20	77.93	77.66	77.39
6.00	0.50	8.09	85.41	0.00	33.79	80.63	80.36	80.08	79.80	79.53	79.25	78.98	78.70	78.42	78.15	77.87	77.59	77.32	77.04
6.50	0.50	7.81	85.19	0.00	37.98	80.36	80.08	79.79	79.51	79.22	78.94	78.66	78.37	78.09	77.80	77.52	77.24	76.95	76.67
7.00	0.50	7.53	84.97	0.00	42.46	80.07	79.78	79.48	79.19	78.90	78.61	78.31	78.02	77.73	77.44	77.15	76.85	76.56	76.27
7.50	0.50	7.24	84.76	0.00	47.27	79.75	79.45	79.15	78.85	78.55	78.25	77.95	77.65	77.35	77.05	76.74	76.44	76.14	75.84
8.00	0.50	6.96	84.54	0.00	52.44	79.42	79.11	78.80	78.49	78.18	77.86	77.55	77.24	76.93	76.62	76.31	76.00	75.69	75.38
8.50	0.50	6.68	84.32	0.00	58.02	79.05	78.73	78.41	78.09	77.77	77.45	77.13	76.81	76.49	76.17	75.85	75.52	75.20	74.88
9.00	0.50	6.40	84.10	0.00	64.05	78.66	78.33	78.00	77.67	77.33	77.00	76.67	76.34	76.01	75.67	75.34	75.01	74.68	74.35
9.50	0.50	6.11	83.89	0.00	70.61	78.23	77.89	77.55	77.20	76.86	76.51	76.17	75.83	75.48	75.14	74.79	74.45	74.11	73.76
10.00	0.50	5.83	83.67	0.00	77.74	77.77	77.41	77.06	76.70	76.34	75.98	75.63	75.27	74.91	74.55	74.20	73.84	73.48	73.13
10.50	0.50	5.55	83.45	0.00	85.55	77.26	76.89	76.52	76.15	75.77	75.40	75.03	74.66	74.29	73.92	73.55	73.17	72.80	72.43
11.00	0.50	5.27	83.23	0.00	94.12	76.70	76.32	75.93	75.54	75.15	74.77	74.38	73.99	73.60	73.22	72.83	72.44	72.05	71.67
11.50	0.50	4.98	83.02	0.00	103.57	76.09	75.68	75.28	74.87	74.47	74.06	73.66	73.25	72.85	72.44	72.04	71.63	71.23	70.82
12.00	0.50	4.70	82.80	0.00	114.05	75.41	74.98	74.56	74.13	73.71	73.28	72.86	72.44	72.01	71.59	71.16	70.74	70.32	69.89
12.50	0.50	4.42	82.58	0.00	125.73	74.64	74.20	73.75	73.31	72.86	72.42	71.97	71.52	71.08	70.63	70.19	69.74	69.30	68.85
13.00	0.50	4.14	82.36	0.00	138.83	73.79	73.32	72.85	72.38	71.91	71.44	70.97	70.50	70.03	69.56	69.09	68.62	68.15	67.68
13.50	0.50	3.85	82.15	0.00	153.64	72.83	72.33	71.83	71.34	70.84	70.34	69.84	69.35	68.85	68.35	67.85	67.36	66.86	66.36
14.00	0.50	3.57	81.93	0.00	170.50	71.73	71.20	70.67	70.14	69.62	69.09	68.56	68.03	67.50	66.97	66.45	65.92	65.39	64.86
14.50	0.50	3.29	81.71	0.00	189.88	70.47	69.90	69.34	68.77	68.21	67.65	67.08	66.52	65.95	65.39	64.83	64.26	63.70	63.13
15.00	0.50	3.01	81.49	0.00	212.37	69.00	68.40	67.79	67.19	66.58	65.97	65.37	64.76	64.16	63.55	62.95	62.34	61.74	61.13

COMBUSTION EFFICIENCY TABLE FOR NATURAL GAS

Properties of Natural Gas:

Molecular Weight: $16.7 \frac{lb}{lbm\ mole}$

Specific Heat: $0.487 \frac{BTU}{lb\ R}$

Enthalpy of Formation: $-2537 \frac{BTU}{lb}$

Higher Heating Value: $21869.0 \frac{BTU}{lb}$

Dry Products of Combustion						COMBUSTION EFFICIENCY *(Efficiencies are listed by flue gas temperature less surrounding temperature, °F)*													
$\%O_2$	$\%CO$	$\%CO_2$	$\%N_2$	$\%SO_2$	% Excess Air	450	460	470	480	490	500	510	520	530	540	550	560	570	580
0.00	0.50	11.48	88.02	0.00	-1.05	79.93	79.72	79.51	79.30	79.09	78.88	78.66	78.45	78.24	78.03	77.82	77.60	77.39	77.18
0.50	0.50	11.20	87.80	0.00	1.08	79.74	79.52	79.31	79.09	78.88	78.66	78.45	78.23	78.01	77.80	77.58	77.37	77.15	76.93
1.00	0.50	10.92	87.58	0.00	3.32	79.54	79.32	79.10	78.88	78.66	78.44	78.22	78.00	77.78	77.56	77.34	77.12	76.90	76.68
1.50	0.50	10.63	87.37	0.00	5.67	79.32	79.10	78.87	78.65	78.43	78.20	77.98	77.75	77.53	77.30	77.08	76.86	76.63	76.41
2.00	0.50	10.35	87.15	0.00	8.14	79.10	78.87	78.64	78.41	78.18	77.95	77.73	77.50	77.27	77.04	76.81	76.58	76.35	76.12
2.50	0.50	10.07	86.93	0.00	10.75	78.86	78.63	78.39	78.16	77.93	77.69	77.46	77.23	76.99	76.76	76.52	76.29	76.06	75.82
3.00	0.50	9.79	86.71	0.00	13.50	78.61	78.37	78.13	77.90	77.66	77.42	77.18	76.94	76.70	76.46	76.22	75.99	75.75	75.51
3.50	0.50	9.50	86.50	0.00	16.40	78.35	78.10	77.86	77.61	77.37	77.13	76.88	76.64	76.39	76.15	75.91	75.66	75.42	75.17
4.00	0.50	9.22	86.28	0.00	19.47	78.07	77.82	77.57	77.32	77.07	76.82	76.57	76.32	76.07	75.82	75.57	75.32	75.07	74.82
4.50	0.50	8.94	86.06	0.00	22.73	77.77	77.52	77.26	77.00	76.75	76.49	76.24	75.98	75.73	75.47	75.21	74.96	74.70	74.45
5.00	0.50	8.66	85.84	0.00	26.19	77.46	77.19	76.93	76.67	76.41	76.15	75.88	75.62	75.36	75.10	74.84	74.57	74.31	74.05
5.50	0.50	8.37	85.63	0.00	29.87	77.12	76.85	76.58	76.32	76.05	75.78	75.51	75.24	74.97	74.70	74.43	74.16	73.90	73.63
6.00	0.50	8.09	85.41	0.00	33.79	76.77	76.49	76.21	75.94	75.66	75.39	75.11	74.83	74.56	74.28	74.00	73.73	73.45	73.18
6.50	0.50	7.81	85.19	0.00	37.98	76.39	76.10	75.82	75.53	75.25	74.97	74.68	74.40	74.11	73.83	73.55	73.26	72.98	72.69
7.00	0.50	7.53	84.97	0.00	42.46	75.98	75.69	75.39	75.10	74.81	74.52	74.22	73.93	73.64	73.35	73.06	72.76	72.47	72.18
7.50	0.50	7.24	84.76	0.00	47.27	75.54	75.24	74.94	74.64	74.34	74.04	73.73	73.43	73.13	72.83	72.53	72.23	71.93	71.63
8.00	0.50	6.96	84.54	0.00	52.44	75.07	74.76	74.45	74.14	73.83	73.52	73.21	72.90	72.59	72.27	71.96	71.65	71.34	71.03
8.50	0.50	6.68	84.32	0.00	58.02	74.56	74.24	73.92	73.60	73.28	72.96	72.64	72.32	72.00	71.67	71.35	71.03	70.71	70.39
9.00	0.50	6.40	84.10	0.00	64.05	74.01	73.68	73.36	73.02	72.69	72.35	72.02	71.69	71.36	71.03	70.69	70.36	70.03	69.70
9.50	0.50	6.11	83.89	0.00	70.61	73.42	73.07	72.73	72.39	72.04	71.70	71.35	71.01	70.66	70.32	69.98	69.63	69.29	68.94
10.00	0.50	5.83	83.67	0.00	77.74	72.77	72.41	72.05	71.70	71.34	70.98	70.63	70.27	69.91	69.55	69.20	68.84	68.48	68.12
10.50	0.50	5.55	83.45	0.00	85.55	72.06	71.69	71.32	70.94	70.57	70.20	69.83	69.46	69.09	68.71	68.34	67.97	67.60	67.23
11.00	0.50	5.27	83.23	0.00	94.12	71.26	70.89	70.50	70.12	69.73	69.34	68.95	68.57	68.18	67.79	67.41	67.02	66.63	66.24
11.50	0.50	4.98	83.02	0.00	103.57	70.42	70.01	69.61	69.21	68.80	68.40	67.99	67.59	67.18	66.78	66.37	65.97	65.56	65.16
12.00	0.50	4.70	82.80	0.00	114.05	69.47	69.04	68.62	68.19	67.77	67.35	66.92	66.50	66.07	65.65	65.23	64.80	64.38	63.95
12.50	0.50	4.42	82.58	0.00	125.73	68.40	67.96	67.51	67.07	66.62	66.18	65.73	65.29	64.84	64.39	63.95	63.50	63.06	62.61
13.00	0.50	4.14	82.36	0.00	138.83	67.21	66.74	66.27	65.80	65.33	64.86	64.39	63.92	63.45	62.98	62.51	62.04	61.57	61.10
13.50	0.50	3.86	82.14	0.00	153.64	65.87	65.37	64.87	64.37	63.88	63.38	62.88	62.39	61.89	61.39	60.89	60.40	59.90	59.40
14.00	0.50	3.57	81.93	0.00	170.50	64.33	63.80	63.28	62.76	62.22	61.69	61.16	60.63	60.11	59.58	59.05	58.52	57.99	57.47
14.50	0.50	3.29	81.71	0.00	189.88	62.57	62.01	61.44	60.88	60.31	59.75	59.19	58.62	58.06	57.49	56.93	56.37	55.80	55.24
15.00	0.50	3.01	81.49	0.00	212.37	60.52	59.92	59.31	58.71	58.10	57.50	56.89	56.29	55.68	55.08	54.47	53.86	53.26	52.65

COMBUSTION EFFICIENCY TABLE FOR NATURAL GAS

Properties of Natural Gas:

Molecular Weight: 16.7 $\frac{lb}{lbm\ mole}$

Specific Heat: 0.487 $\frac{BTU}{lb\ R}$

Enthalpy of Formation: -2537 $\frac{BTU}{lb}$

Higher Heating Value: 21869.0 $\frac{BTU}{lb}$

Dry Products of Combustion						COMBUSTION EFFICIENCY *(Efficiencies are listed by flue gas temperature less surrounding temperature, °F)*													
$\%O_2$	$\%CO$	$\%CO_2$	$\%N_2$	$\%SO_2$	% Excess Air	590	600	610	620	630	640	650	660	670	680	690	700	710	720
0.00	0.50	11.48	88.02	0.00	-1.05	76.97	76.76	76.54	76.33	76.12	75.91	75.70	75.48	75.27	75.06	74.85	74.64	74.42	74.21
0.50	0.50	11.20	87.80	0.00	1.08	76.72	76.50	76.29	76.07	75.86	75.64	75.42	75.21	74.99	74.78	74.56	74.34	74.13	73.91
1.00	0.50	10.92	87.58	0.00	3.32	76.46	76.24	76.02	75.80	75.58	75.36	75.14	74.92	74.70	74.48	74.26	74.04	73.82	73.60
1.50	0.50	10.63	87.37	0.00	5.67	76.18	75.96	75.73	75.51	75.29	75.06	74.84	74.61	74.39	74.16	73.94	73.72	73.49	73.27
2.00	0.50	10.35	87.15	0.00	8.14	75.89	75.67	75.44	75.21	74.98	74.75	74.52	74.29	74.06	73.83	73.61	73.38	73.15	72.92
2.50	0.50	10.07	86.93	0.00	10.75	75.59	75.36	75.12	74.89	74.66	74.42	74.19	73.95	73.72	73.49	73.25	73.02	72.79	72.55
3.00	0.50	9.79	86.71	0.00	13.50	75.27	75.03	74.79	74.55	74.31	74.08	73.84	73.60	73.36	73.12	72.88	72.64	72.40	72.17
3.50	0.50	9.50	86.50	0.00	16.40	74.93	74.69	74.44	74.20	73.95	73.71	73.47	73.22	72.98	72.73	72.49	72.24	72.00	71.76
4.00	0.50	9.22	86.28	0.00	19.47	74.57	74.32	74.07	73.82	73.57	73.32	73.07	72.82	72.57	72.32	72.07	71.82	71.57	71.32
4.50	0.50	8.94	86.06	0.00	22.73	74.19	73.93	73.68	73.42	73.17	72.91	72.66	72.40	72.14	71.89	71.63	71.38	71.12	70.87
5.00	0.50	8.66	85.84	0.00	26.19	73.79	73.52	73.26	73.00	72.74	72.48	72.21	71.95	71.69	71.43	71.17	70.90	70.64	70.38
5.50	0.50	8.37	85.63	0.00	29.87	73.36	73.09	72.82	72.55	72.28	72.01	71.74	71.47	71.21	70.94	70.67	70.40	70.13	69.86
6.00	0.50	8.09	85.41	0.00	33.79	72.90	72.62	72.35	72.07	71.79	71.52	71.24	70.97	70.69	70.41	70.14	69.86	69.59	69.31
6.50	0.50	7.81	85.19	0.00	37.98	72.41	72.13	71.84	71.56	71.28	70.99	70.71	70.42	70.14	69.86	69.57	69.29	69.00	68.72
7.00	0.50	7.53	84.97	0.00	42.46	71.89	71.60	71.30	71.01	70.72	70.43	70.13	69.84	69.55	69.26	68.97	68.67	68.38	68.09
7.50	0.50	7.24	84.76	0.00	47.27	71.33	71.03	70.72	70.42	70.12	69.82	69.52	69.22	68.92	68.62	68.32	68.01	67.71	67.41
8.00	0.50	6.96	84.54	0.00	52.44	70.72	70.41	70.10	69.79	69.48	69.17	68.86	68.55	68.24	67.93	67.62	67.31	67.00	66.68
8.50	0.50	6.68	84.32	0.00	58.02	70.07	69.75	69.43	69.11	68.79	68.47	68.15	67.82	67.50	67.18	66.86	66.54	66.22	65.90
9.00	0.50	6.40	84.10	0.00	64.05	69.37	69.03	68.70	68.37	68.04	67.71	67.37	67.04	66.71	66.38	66.05	65.71	65.38	65.05
9.50	0.50	6.11	83.89	0.00	70.61	68.60	68.26	67.91	67.57	67.22	66.88	66.54	66.19	65.85	65.50	65.16	64.82	64.47	64.13
10.00	0.50	5.83	83.67	0.00	77.74	67.77	67.41	67.05	66.70	66.34	65.98	65.62	65.27	64.91	64.55	64.20	63.84	63.48	63.12
10.50	0.50	5.55	83.45	0.00	85.55	66.86	66.48	66.11	65.74	65.37	65.00	64.63	64.25	63.88	63.51	63.14	62.77	62.40	62.03
11.00	0.50	5.27	83.23	0.00	94.12	65.86	65.47	65.08	64.69	64.31	63.92	63.53	63.14	62.76	62.37	61.98	61.59	61.21	60.82
11.50	0.50	4.98	83.02	0.00	103.57	64.75	64.35	63.94	63.54	63.13	62.73	62.32	61.92	61.51	61.11	60.70	60.30	59.89	59.49
12.00	0.50	4.70	82.80	0.00	114.05	63.53	63.10	62.68	62.26	61.83	61.41	60.98	60.56	60.14	59.71	59.29	58.86	58.44	58.01
12.50	0.50	4.42	82.58	0.00	125.73	62.16	61.72	61.27	60.83	60.38	59.94	59.49	59.04	58.60	58.15	57.71	57.26	56.82	56.37
13.00	0.50	4.14	82.36	0.00	138.83	60.63	60.16	59.69	59.22	58.75	58.29	57.82	57.35	56.88	56.41	55.94	55.47	55.00	54.53
13.50	0.50	3.85	82.15	0.00	153.64	58.91	58.41	57.91	57.41	56.92	56.42	55.92	55.43	54.93	54.43	53.93	53.44	52.94	52.44
14.00	0.50	3.57	81.93	0.00	170.50	56.94	56.41	55.88	55.35	54.82	54.30	53.77	53.24	52.71	52.18	51.65	51.13	50.60	50.07
14.50	0.50	3.29	81.71	0.00	189.88	54.67	54.11	53.55	52.98	52.42	51.85	51.29	50.73	50.16	49.60	49.03	48.47	47.91	47.34
15.00	0.50	3.01	81.49	0.00	212.37	52.05	51.44	50.84	50.23	49.63	49.02	48.41	47.81	47.20	46.60	45.99	45.39	44.78	44.18

COMBUSTION EFFICIENCY TABLE FOR NUMBER 2 OIL

Properties of Number 2 Oil:

Molecular Weight: $208.0 \frac{lb}{lbm\ mole}$

Specific Heat: $0.480 \frac{BTU}{lb\ R}$

Enthalpy of Formation: $-225 \frac{BTU}{lb}$

Higher Heating Value: $19512.0 \frac{BTU}{lb}$

Dry Products of Combustion						COMBUSTION EFFICIENCY *(Efficiencies are listed by flue gas temperature less surrounding temperature, °F)*													
$\%O_2$	$\%CO$	$\%CO_2$	$\%N_2$	$\%SO_2$	% Excess Air	170	180	190	200	210	220	230	240	250	260	270	280	290	300
0.00	0.00	15.60	84.29	0.11	-0.00	90.63	90.42	90.22	90.01	89.80	89.60	89.39	89.19	88.98	88.78	88.57	88.37	88.16	87.96
0.50	0.00	15.23	84.16	0.11	2.28	90.55	90.35	90.14	89.93	89.72	89.51	89.30	89.09	88.88	88.67	88.46	88.25	88.04	87.83
1.00	0.00	14.86	84.03	0.10	4.68	90.48	90.27	90.05	89.84	89.63	89.41	89.20	88.99	88.77	88.56	88.34	88.13	87.92	87.70
1.50	0.00	14.49	83.91	0.10	7.21	90.40	90.18	89.97	89.75	89.53	89.31	89.09	88.88	88.66	88.44	88.22	88.00	87.78	87.57
2.00	0.00	14.12	83.78	0.10	9.86	90.32	90.10	89.87	89.65	89.43	89.21	88.98	88.76	88.54	88.31	88.09	87.87	87.65	87.42
2.50	0.00	13.75	83.66	0.10	12.66	90.23	90.01	89.78	89.55	89.32	89.09	88.87	88.64	88.41	88.18	87.95	87.73	87.50	87.27
3.00	0.00	13.38	83.53	0.09	15.61	90.14	89.91	89.68	89.44	89.21	88.98	88.74	88.51	88.28	88.04	87.81	87.58	87.34	87.11
3.50	0.00	13.00	83.40	0.09	18.73	90.05	89.81	89.57	89.33	89.09	88.85	88.61	88.37	88.13	87.90	87.66	87.42	87.18	86.94
4.00	0.00	12.63	83.28	0.09	22.04	89.94	89.70	89.45	89.21	88.96	88.72	88.47	88.23	87.98	87.74	87.49	87.25	87.00	86.76
4.50	0.00	12.26	83.15	0.09	25.54	89.84	89.59	89.33	89.08	88.83	88.58	88.33	88.08	87.83	87.57	87.32	87.07	86.82	86.57
5.00	0.00	11.89	83.03	0.08	29.27	89.72	89.46	89.21	88.95	88.69	88.43	88.17	87.91	87.66	87.40	87.14	86.88	86.62	86.37
5.50	0.00	11.52	82.90	0.08	33.23	89.60	89.33	89.07	88.80	88.54	88.27	88.01	87.74	87.48	87.21	86.95	86.68	86.42	86.15
6.00	0.00	11.15	82.77	0.08	37.46	89.47	89.20	88.92	88.65	88.38	88.10	87.83	87.56	87.28	87.01	86.74	86.47	86.19	85.92
6.50	0.00	10.78	82.65	0.08	41.98	89.33	89.05	88.77	88.49	88.20	87.92	87.64	87.36	87.08	86.80	86.52	86.24	85.95	85.67
7.00	0.00	10.40	82.52	0.07	46.83	89.18	88.89	88.60	88.31	88.02	87.73	87.44	87.15	86.86	86.57	86.28	85.99	85.70	85.41
7.50	0.00	10.03	82.40	0.07	52.03	89.02	88.72	88.42	88.12	87.82	87.52	87.22	86.92	86.62	86.32	86.03	85.73	85.43	85.13
8.00	0.00	9.66	82.27	0.07	57.63	88.85	88.54	88.23	87.92	87.61	87.30	86.99	86.68	86.37	86.06	85.75	85.44	85.13	84.82
8.50	0.00	9.29	82.14	0.07	63.68	88.66	88.34	88.02	87.70	87.38	87.06	86.74	86.42	86.10	85.77	85.45	85.13	84.81	84.49
9.00	0.00	8.92	82.02	0.06	70.23	88.46	88.12	87.79	87.46	87.13	86.79	86.46	86.13	85.80	85.47	85.13	84.80	84.47	84.14
9.50	0.00	8.55	81.89	0.06	77.36	88.24	87.89	87.55	87.20	86.86	86.51	86.17	85.82	85.47	85.13	84.78	84.44	84.09	83.75
10.00	0.00	8.18	81.77	0.06	85.13	88.00	87.64	87.28	86.92	86.56	86.20	85.84	85.48	85.12	84.76	84.40	84.04	83.68	83.33
10.50	0.00	7.81	81.64	0.05	93.63	87.73	87.36	86.98	86.61	86.23	85.86	85.49	85.11	84.74	84.36	83.99	83.61	83.24	82.86
11.00	0.00	7.43	81.51	0.05	102.99	87.45	87.05	86.66	86.27	85.88	85.49	85.09	84.70	84.31	83.92	83.53	83.14	82.74	82.35
11.50	0.00	7.06	81.39	0.05	113.34	87.13	86.72	86.30	85.89	85.48	85.07	84.66	84.25	83.84	83.43	83.02	82.61	82.20	81.79
12.00	0.00	6.69	81.26	0.05	124.83	86.77	86.34	85.91	85.48	85.05	84.61	84.18	83.75	83.32	82.89	82.46	82.03	81.60	81.16
12.50	0.00	6.32	81.14	0.04	137.67	86.37	85.92	85.47	85.01	84.56	84.10	83.65	83.19	82.74	82.28	81.83	81.37	80.92	80.46
13.00	0.00	5.95	81.01	0.04	152.12	85.93	85.45	84.97	84.49	84.01	83.52	83.04	82.56	82.08	81.60	81.12	80.64	80.16	79.68
13.50	0.00	5.58	80.88	0.04	168.49	85.42	84.91	84.40	83.89	83.38	82.87	82.36	81.85	81.34	80.83	80.32	79.81	79.30	78.79
14.00	0.00	5.21	80.76	0.04	187.19	84.85	84.30	83.76	83.21	82.67	82.12	81.58	81.04	80.49	79.95	79.40	78.86	78.31	77.77
14.50	0.00	4.83	80.63	0.03	208.77	84.18	83.60	83.01	82.43	81.85	81.26	80.68	80.09	79.51	78.93	78.34	77.76	77.18	76.59
15.00	0.00	4.46	80.51	0.03	233.95	83.40	82.77	82.14	81.51	80.89	80.26	79.63	79.00	78.37	77.74	77.11	76.48	75.85	75.22

COMBUSTION EFFICIENCY TABLE FOR NUMBER 2 OIL

Properties of Number 2 Oil:

Molecular Weight: 208.0 $\frac{lb}{lbm\ mole}$

Specific Heat: 0.480 $\frac{BTU}{lb\ R}$

Enthalpy of Formation: -225 $\frac{BTU}{lb}$

Higher Heating Value: 19512.0 $\frac{BTU}{lb}$

Dry Products of Combustion						COMBUSTION EFFICIENCY *(Efficiencies are listed by flue gas temperature less surrounding temperature, °F)*													
$\%O_2$	$\%CO$	$\%CO_2$	$\%N_2$	$\%SO_2$	% Excess Air	310	320	330	340	350	360	370	380	390	400	410	420	430	440
0.00	0.00	15.60	84.29	0.11	-0.00	87.75	87.55	87.34	87.14	86.93	86.73	86.52	86.32	86.11	85.91	85.70	85.50	85.29	85.09
0.50	0.00	15.23	84.16	0.11	2.28	87.63	87.42	87.21	87.00	86.79	86.58	86.37	86.16	85.95	85.74	85.53	85.32	85.11	84.91
1.00	0.00	14.86	84.03	0.10	4.68	87.49	87.28	87.06	86.85	86.64	86.42	86.21	86.00	85.78	85.57	85.35	85.14	84.93	84.71
1.50	0.00	14.49	83.91	0.10	7.21	87.35	87.13	86.91	86.69	86.48	86.26	86.04	85.82	85.60	85.39	85.17	84.95	84.73	84.51
2.00	0.00	14.12	83.78	0.10	9.86	87.20	86.98	86.75	86.53	86.31	86.08	85.86	85.64	85.42	85.19	84.97	84.75	84.52	84.30
2.50	0.00	13.75	83.66	0.10	12.66	87.04	86.81	86.59	86.36	86.13	85.90	85.67	85.45	85.22	84.99	84.76	84.53	84.31	84.08
3.00	0.00	13.38	83.53	0.09	15.61	86.88	86.64	86.41	86.18	85.94	85.71	85.48	85.24	85.01	84.78	84.54	84.31	84.08	83.84
3.50	0.00	13.00	83.40	0.09	18.73	86.70	86.46	86.22	85.98	85.74	85.51	85.27	85.03	84.79	84.55	84.31	84.07	83.83	83.59
4.00	0.00	12.63	83.28	0.09	22.04	86.51	86.27	86.02	85.78	85.53	85.29	85.04	84.80	84.55	84.31	84.06	83.82	83.57	83.33
4.50	0.00	12.26	83.15	0.09	25.54	86.32	86.07	85.81	85.56	85.31	85.06	84.81	84.56	84.31	84.05	83.80	83.55	83.30	83.05
5.00	0.00	11.89	83.03	0.08	29.27	86.11	85.85	85.59	85.33	85.08	84.82	84.56	84.30	84.04	83.78	83.53	83.27	83.01	82.75
5.50	0.00	11.52	82.90	0.08	33.23	85.88	85.62	85.35	85.09	84.82	84.56	84.29	84.03	83.76	83.50	83.23	82.97	82.70	82.44
6.00	0.00	11.15	82.77	0.08	37.46	85.65	85.37	85.10	84.83	84.55	84.28	84.01	83.74	83.46	83.19	82.92	82.64	82.37	82.10
6.50	0.00	10.78	82.65	0.08	41.98	85.39	85.11	84.83	84.55	84.27	83.99	83.71	83.42	83.14	82.86	82.58	82.30	82.02	81.74
7.00	0.00	10.40	82.52	0.07	46.83	85.12	84.83	84.54	84.25	83.96	83.67	83.38	83.09	82.80	82.51	82.22	81.93	81.64	81.35
7.50	0.00	10.03	82.40	0.07	52.03	84.83	84.53	84.23	83.93	83.63	83.33	83.03	82.73	82.43	82.13	81.83	81.53	81.23	80.94
8.00	0.00	9.66	82.27	0.07	57.63	84.51	84.20	83.89	83.58	83.27	82.96	82.66	82.35	82.04	81.73	81.42	81.11	80.80	80.49
8.50	0.00	9.29	82.14	0.07	63.68	84.17	83.85	83.53	83.21	82.89	82.57	82.25	81.93	81.61	81.29	80.97	80.65	80.33	80.01
9.00	0.00	8.92	82.02	0.06	70.23	83.80	83.47	83.14	82.81	82.47	82.14	81.81	81.48	81.14	80.81	80.48	80.15	79.82	79.48
9.50	0.00	8.55	81.89	0.06	77.36	83.40	83.06	82.71	82.37	82.02	81.68	81.33	80.99	80.64	80.30	79.95	79.60	79.26	78.91
10.00	0.00	8.18	81.77	0.06	85.13	82.97	82.61	82.25	81.89	81.53	81.17	80.81	80.45	80.09	79.73	79.37	79.01	78.65	78.29
10.50	0.00	7.81	81.64	0.05	93.63	82.49	82.11	81.74	81.36	80.99	80.61	80.24	79.86	79.49	79.11	78.74	78.36	77.99	77.62
11.00	0.00	7.43	81.51	0.05	102.99	81.96	81.57	81.18	80.79	80.39	80.00	79.61	79.22	78.83	78.44	78.04	77.65	77.26	76.87
11.50	0.00	7.06	81.39	0.05	113.34	81.38	80.97	80.56	80.15	79.74	79.33	78.92	78.51	78.10	77.68	77.27	76.86	76.45	76.04
12.00	0.00	6.69	81.26	0.05	124.83	80.73	80.30	79.87	79.44	79.01	78.58	78.14	77.71	77.28	76.85	76.42	75.99	75.56	75.13
12.50	0.00	6.32	81.14	0.04	137.67	80.01	79.56	79.10	78.65	78.19	77.74	77.28	76.83	76.37	75.92	75.46	75.01	74.56	74.10
13.00	0.00	5.95	81.01	0.04	152.12	79.20	78.72	78.24	77.76	77.27	76.79	76.31	75.83	75.35	74.87	74.39	73.91	73.43	72.95
13.50	0.00	5.58	80.88	0.04	168.49	78.28	77.77	77.26	76.75	76.24	75.73	75.21	74.70	74.19	73.68	73.17	72.66	72.15	71.64
14.00	0.00	5.21	80.76	0.04	187.19	77.22	76.68	76.14	75.59	75.05	74.50	73.96	73.41	72.87	72.33	71.78	71.24	70.69	70.15
14.50	0.00	4.83	80.63	0.03	208.77	76.01	75.43	74.84	74.26	73.68	73.09	72.51	71.93	71.34	70.76	70.18	69.59	69.01	68.43
15.00	0.00	4.46	80.51	0.03	233.95	74.60	73.97	73.34	72.71	72.08	71.45	70.82	70.19	69.56	68.93	68.31	67.68	67.05	66.42

COMBUSTION EFFICIENCY TABLE FOR NUMBER 2 OIL

Properties of Number 2 Oil:

Molecular Weight: $208.0 \frac{lb}{lbm\ mole}$

Specific Heat: $0.480 \frac{BTU}{lb\ R}$

Enthalpy of Formation: $-225 \frac{BTU}{lb}$

Higher Heating Value: $19512.0 \frac{BTU}{lb}$

Dry Products of Combustion						COMBUSTION EFFICIENCY *(Efficiencies are listed by flue gas temperature less surrounding temperature, °F)*													
$\%O_2$	$\%CO$	$\%CO_2$	$\%N_2$	$\%SO_2$	% Excess Air	450	460	470	480	490	500	510	520	530	540	550	560	570	580
0.00	0.00	15.60	84.29	0.11	-0.00	84.88	84.68	84.47	84.27	84.06	83.86	83.65	83.45	83.24	83.04	82.83	82.63	82.42	82.22
0.50	0.00	15.23	84.16	0.11	2.28	84.70	84.49	84.28	84.07	83.86	83.65	83.44	83.23	83.02	82.81	82.60	82.39	82.19	81.98
1.00	0.00	14.86	84.03	0.10	4.68	84.50	84.29	84.07	83.86	83.65	83.43	83.22	83.01	82.79	82.58	82.36	82.15	81.94	81.72
1.50	0.00	14.49	83.91	0.10	7.21	84.29	84.08	83.86	83.64	83.42	83.20	82.99	82.77	82.55	82.33	82.11	81.89	81.68	81.46
2.00	0.00	14.12	83.78	0.10	9.86	84.08	83.85	83.63	83.41	83.19	82.96	82.74	82.52	82.29	82.07	81.85	81.63	81.40	81.18
2.50	0.00	13.75	83.66	0.10	12.66	83.85	83.62	83.39	83.17	82.94	82.71	82.48	82.25	82.03	81.80	81.57	81.34	81.11	80.88
3.00	0.00	13.38	83.53	0.09	15.61	83.61	83.38	83.14	82.91	82.67	82.44	82.21	81.97	81.74	81.51	81.27	81.04	80.81	80.57
3.50	0.00	13.00	83.40	0.09	18.73	83.35	83.11	82.88	82.64	82.40	82.16	81.92	81.68	81.44	81.20	80.96	80.72	80.49	80.25
4.00	0.00	12.63	83.28	0.09	22.04	83.08	82.84	82.59	82.35	82.10	81.86	81.61	81.37	81.12	80.88	80.63	80.39	80.14	79.90
4.50	0.00	12.26	83.15	0.09	25.54	82.80	82.55	82.29	82.04	81.79	81.54	81.29	81.04	80.79	80.54	80.28	80.03	79.78	79.53
5.00	0.00	11.89	83.03	0.08	29.27	82.49	82.24	81.98	81.72	81.46	81.20	80.94	80.69	80.43	80.17	79.91	79.65	79.40	79.14
5.50	0.00	11.52	82.90	0.08	33.23	82.17	81.90	81.64	81.37	81.11	80.84	80.58	80.31	80.05	79.78	79.52	79.25	78.99	78.72
6.00	0.00	11.15	82.77	0.08	37.46	81.82	81.55	81.28	81.01	80.73	80.46	80.19	79.91	79.64	79.37	79.10	78.82	78.55	78.28
6.50	0.00	10.78	82.65	0.08	41.98	81.46	81.17	80.89	80.61	80.33	80.05	79.77	79.49	79.21	78.93	78.64	78.36	78.08	77.80
7.00	0.00	10.40	82.52	0.07	46.83	81.06	80.77	80.48	80.19	79.90	79.61	79.32	79.03	78.74	78.45	78.16	77.87	77.58	77.29
7.50	0.00	10.03	82.40	0.07	52.03	80.64	80.34	80.04	79.74	79.44	79.14	78.84	78.54	78.24	77.94	77.64	77.34	77.04	76.74
8.00	0.00	9.66	82.27	0.07	57.63	80.18	79.87	79.56	79.25	78.94	78.63	78.32	78.01	77.70	77.39	77.08	76.77	76.46	76.16
8.50	0.00	9.29	82.14	0.07	63.68	79.69	79.36	79.04	78.72	78.40	78.08	77.76	77.44	77.12	76.80	76.48	76.16	75.84	75.52
9.00	0.00	8.92	82.02	0.06	70.23	79.15	78.82	78.49	78.15	77.82	77.49	77.16	76.82	76.49	76.16	75.83	75.49	75.16	74.83
9.50	0.00	8.55	81.89	0.06	77.36	78.57	78.22	77.88	77.53	77.19	76.84	76.50	76.15	75.81	75.46	75.12	74.77	74.43	74.08
10.00	0.00	8.18	81.77	0.06	85.13	77.94	77.58	77.22	76.86	76.50	76.14	75.78	75.42	75.06	74.70	74.34	73.98	73.62	73.26
10.50	0.00	7.81	81.64	0.05	93.63	77.24	76.87	76.49	76.12	75.74	75.37	74.99	74.62	74.24	73.87	73.49	73.12	72.74	72.37
11.00	0.00	7.43	81.51	0.05	102.99	76.48	76.08	75.69	75.30	74.91	74.52	74.13	73.73	73.34	72.95	72.56	72.17	71.78	71.38
11.50	0.00	7.06	81.39	0.05	113.34	75.63	75.22	74.81	74.40	73.99	73.58	73.17	72.76	72.35	71.94	71.53	71.12	70.71	70.30
12.00	0.00	6.69	81.26	0.05	124.83	74.69	74.26	73.83	73.40	72.97	72.54	72.11	71.68	71.24	70.81	70.38	69.95	69.52	69.09
12.50	0.00	6.32	81.14	0.04	137.67	73.65	73.19	72.74	72.28	71.83	71.37	70.92	70.46	70.01	69.56	69.10	68.65	68.19	67.74
13.00	0.00	5.95	81.01	0.04	152.12	72.47	71.99	71.51	71.03	70.54	70.06	69.58	69.10	68.62	68.14	67.66	67.18	66.70	66.22
13.50	0.00	5.58	80.88	0.04	168.49	71.13	70.62	70.11	69.60	69.09	68.58	68.07	67.56	67.05	66.54	66.03	65.52	65.01	64.50
14.00	0.00	5.21	80.76	0.04	187.19	69.60	69.06	68.52	67.97	67.43	66.88	66.34	65.79	65.25	64.71	64.16	63.62	63.07	62.53
14.50	0.00	4.83	80.63	0.03	208.77	67.84	67.26	66.68	66.09	65.51	64.93	64.34	63.76	63.18	62.59	62.01	61.43	60.84	60.26
15.00	0.00	4.46	80.51	0.03	233.95	65.79	65.16	64.53	63.90	63.27	62.64	62.01	61.39	60.76	60.13	59.50	58.87	58.24	57.61

COMBUSTION EFFICIENCY TABLE FOR NUMBER 2 OIL

Properties of Number 2 Oil:

Molecular Weight: 208.0 $\frac{lb}{lbm\ mole}$

Specific Heat: 0.480 $\frac{BTU}{lb\ R}$

Enthalpy of Formation: -225 $\frac{BTU}{lb}$

Higher Heating Value: 19512.0 $\frac{BTU}{lb}$

Dry Products of Combustion						COMBUSTION EFFICIENCY *(Efficiencies are listed by flue gas temperature less surrounding temperature, °F)*													
$\%O_2$	$\%CO$	$\%CO_2$	$\%N_2$	$\%SO_2$	% Excess Air	590	600	610	620	630	640	650	660	670	680	690	700	710	720
0.00	0.00	15.60	84.29	0.11	-0.00	82.01	81.81	81.60	81.40	81.19	80.99	80.78	80.58	80.37	80.17	79.96	79.76	79.55	79.34
0.50	0.00	15.23	84.16	0.11	2.28	81.77	81.56	81.35	81.14	80.93	80.72	80.51	80.30	80.09	79.88	79.67	79.47	79.26	79.05
1.00	0.00	14.86	84.03	0.10	4.68	81.51	81.30	81.08	80.87	80.66	80.44	80.23	80.01	79.80	79.59	79.37	79.16	78.95	78.73
1.50	0.00	14.49	83.91	0.10	7.21	81.24	81.02	80.80	80.59	80.37	80.15	79.93	79.71	79.50	79.28	79.06	78.84	78.62	78.40
2.00	0.00	14.12	83.78	0.10	9.86	80.96	80.73	80.51	80.29	80.06	79.84	79.62	79.40	79.17	78.95	78.73	78.50	78.28	78.06
2.50	0.00	13.75	83.66	0.10	12.66	80.66	80.43	80.20	79.97	79.74	79.52	79.29	79.06	78.83	78.60	78.38	78.15	77.92	77.69
3.00	0.00	13.38	83.53	0.09	15.61	80.34	80.11	79.87	79.64	79.41	79.17	78.94	78.71	78.47	78.24	78.01	77.77	77.54	77.31
3.50	0.00	13.00	83.40	0.09	18.73	80.01	79.77	79.53	79.29	79.05	78.81	78.57	78.33	78.09	77.86	77.62	77.38	77.14	76.90
4.00	0.00	12.63	83.28	0.09	22.04	79.65	79.41	79.16	78.92	78.67	78.43	78.18	77.94	77.69	77.45	77.20	76.96	76.71	76.47
4.50	0.00	12.26	83.15	0.09	25.54	79.28	79.03	78.78	78.52	78.27	78.02	77.77	77.52	77.27	77.02	76.76	76.51	76.26	76.01
5.00	0.00	11.89	83.03	0.08	29.27	78.88	78.62	78.36	78.11	77.85	77.59	77.33	77.07	76.81	76.56	76.30	76.04	75.78	75.52
5.50	0.00	11.52	82.90	0.08	33.23	78.46	78.19	77.93	77.66	77.39	77.13	76.86	76.60	76.33	76.07	75.80	75.54	75.27	75.01
6.00	0.00	11.15	82.77	0.08	37.46	78.00	77.73	77.46	77.18	76.91	76.64	76.37	76.09	75.82	75.55	75.27	75.00	74.73	74.45
6.50	0.00	10.78	82.65	0.08	41.98	77.52	77.24	76.96	76.68	76.39	76.11	75.83	75.55	75.27	74.99	74.71	74.43	74.15	73.86
7.00	0.00	10.40	82.52	0.07	46.83	77.00	76.71	76.42	76.13	75.84	75.55	75.26	74.97	74.68	74.39	74.10	73.81	73.52	73.23
7.50	0.00	10.03	82.40	0.07	52.03	76.44	76.15	75.85	75.55	75.25	74.95	74.65	74.35	74.05	73.75	73.45	73.15	72.85	72.55
8.00	0.00	9.66	82.27	0.07	57.63	75.85	75.54	75.23	74.92	74.61	74.30	73.99	73.68	73.37	73.06	72.75	72.44	72.13	71.82
8.50	0.00	9.29	82.14	0.07	63.68	75.20	74.88	74.56	74.24	73.92	73.60	73.28	72.96	72.63	72.31	71.99	71.67	71.35	71.03
9.00	0.00	8.92	82.02	0.06	70.23	74.50	74.16	73.83	73.50	73.17	72.84	72.50	72.17	71.84	71.51	71.17	70.84	70.51	70.18
9.50	0.00	8.55	81.89	0.06	77.36	73.74	73.39	73.04	72.70	72.35	72.01	71.66	71.32	70.97	70.63	70.28	69.94	69.59	69.25
10.00	0.00	8.18	81.77	0.06	85.13	72.90	72.54	72.19	71.83	71.47	71.11	70.75	70.39	70.03	69.67	69.31	68.95	68.59	68.23
10.50	0.00	7.81	81.64	0.05	93.63	71.99	71.62	71.24	70.87	70.49	70.12	69.75	69.37	69.00	68.62	68.25	67.87	67.50	67.12
11.00	0.00	7.43	81.51	0.05	102.99	70.99	70.60	70.21	69.82	69.43	69.03	68.64	68.25	67.86	67.47	67.08	66.68	66.29	65.90
11.50	0.00	7.06	81.39	0.05	113.34	69.89	69.48	69.06	68.65	68.24	67.83	67.42	67.01	66.60	66.19	65.78	65.37	64.96	64.55
12.00	0.00	6.69	81.26	0.05	124.83	68.66	68.23	67.79	67.36	66.93	66.50	66.07	65.64	65.21	64.77	64.34	63.91	63.48	63.05
12.50	0.00	6.32	81.14	0.04	137.67	67.28	66.83	66.37	65.92	65.46	65.01	64.56	64.10	63.65	63.19	62.74	62.28	61.83	61.37
13.00	0.00	5.95	81.01	0.04	152.12	65.74	65.26	64.78	64.29	63.81	63.33	62.85	62.37	61.89	61.41	60.93	60.45	59.97	59.49
13.50	0.00	5.58	80.88	0.04	168.49	63.99	63.48	62.96	62.45	61.94	61.43	60.92	60.41	59.90	59.39	58.88	58.37	57.86	57.35
14.00	0.00	5.21	80.76	0.04	187.19	61.98	61.44	60.90	60.35	59.81	59.26	58.72	58.17	57.63	57.09	56.54	56.00	55.45	54.91
14.50	0.00	4.83	80.63	0.03	208.77	59.68	59.09	58.51	57.93	57.34	56.76	56.18	55.59	55.01	54.43	53.84	53.26	52.67	52.09
15.00	0.00	4.46	80.51	0.03	233.95	56.98	56.35	55.72	55.10	54.47	53.84	53.21	52.58	51.95	51.32	50.69	50.06	49.43	48.81

COMBUSTION EFFICIENCY TABLE FOR NUMBER 2 OIL

Properties of Number 2 Oil:

Molecular Weight: 208.0 $\frac{lb}{lbm\ mole}$

Specific Heat: 0.480 $\frac{BTU}{lb\ R}$

Enthalpy of Formation: -225 $\frac{BTU}{lb}$

Higher Heating Value: 19512.0 $\frac{BTU}{lb}$

Dry Products of Combustion						COMBUSTION EFFICIENCY *(Efficiencies are listed by flue gas temperature less surrounding temperature, °F)*													
$\%O_2$	$\%CO$	$\%CO_2$	$\%N_2$	$\%SO_2$	% Excess Air	170	180	190	200	210	220	230	240	250	260	270	280	290	300
0.00	0.10	15.53	84.26	0.11	-0.22	90.49	90.28	90.08	89.87	89.67	89.46	89.26	89.05	88.85	88.65	88.44	88.24	88.03	87.83
0.50	0.10	15.16	84.13	0.11	2.05	90.41	90.20	90.00	89.79	89.58	89.37	89.16	88.95	88.74	88.53	88.33	88.12	87.91	87.70
1.00	0.10	14.79	84.00	0.10	4.44	90.34	90.12	89.91	89.70	89.48	89.27	89.06	88.84	88.63	88.42	88.20	87.99	87.78	87.57
1.50	0.10	14.42	83.88	0.10	6.95	90.25	90.04	89.82	89.60	89.38	89.17	88.95	88.73	88.51	88.30	88.08	87.86	87.64	87.42
2.00	0.10	14.05	83.75	0.10	9.59	90.17	89.95	89.72	89.50	89.28	89.06	88.83	88.61	88.39	88.17	87.94	87.72	87.50	87.28
2.50	0.10	13.68	83.63	0.10	12.38	90.08	89.85	89.62	89.40	89.17	88.94	88.71	88.49	88.26	88.03	87.80	87.58	87.35	87.12
3.00	0.10	13.31	83.50	0.09	15.32	89.98	89.75	89.52	89.29	89.05	88.82	88.59	88.35	88.12	87.89	87.66	87.42	87.19	86.96
3.50	0.10	12.93	83.37	0.09	18.42	89.88	89.64	89.41	89.17	88.93	88.69	88.45	88.21	87.98	87.74	87.50	87.26	87.02	86.78
4.00	0.10	12.56	83.25	0.09	21.71	89.78	89.53	89.29	89.04	88.80	88.55	88.31	88.07	87.82	87.58	87.33	87.09	86.84	86.60
4.50	0.10	12.19	83.12	0.09	25.20	89.66	89.41	89.16	88.91	88.66	88.41	88.16	87.91	87.66	87.41	87.16	86.90	86.65	86.40
5.00	0.10	11.82	83.00	0.08	28.90	89.54	89.29	89.03	88.77	88.51	88.26	88.00	87.74	87.48	87.23	86.97	86.71	86.45	86.20
5.50	0.10	11.45	82.87	0.08	32.85	89.42	89.15	88.89	88.62	88.36	88.09	87.83	87.56	87.30	87.03	86.77	86.50	86.24	85.98
6.00	0.10	11.08	82.74	0.08	37.05	89.28	89.01	88.73	88.46	88.19	87.92	87.65	87.37	87.10	86.83	86.56	86.28	86.01	85.74
6.50	0.10	10.71	82.62	0.08	41.55	89.13	88.85	88.57	88.29	88.01	87.73	87.45	87.17	86.89	86.61	86.33	86.05	85.77	85.49
7.00	0.10	10.33	82.49	0.07	46.36	88.98	88.69	88.40	88.11	87.82	87.53	87.24	86.95	86.66	86.38	86.09	85.80	85.51	85.22
7.50	0.10	9.96	82.37	0.07	51.53	88.81	88.51	88.21	87.91	87.62	87.32	87.02	86.72	86.42	86.12	85.82	85.53	85.23	84.93
8.00	0.10	9.59	82.24	0.07	57.10	88.63	88.32	88.01	87.70	87.39	87.09	86.78	86.47	86.16	85.85	85.54	85.23	84.93	84.62
8.50	0.10	9.22	82.11	0.07	63.11	88.43	88.11	87.80	87.48	87.16	86.84	86.52	86.20	85.88	85.56	85.24	84.92	84.60	84.28
9.00	0.10	8.85	81.99	0.06	69.61	88.22	87.89	87.56	87.23	86.90	86.57	86.24	85.90	85.57	85.24	84.91	84.58	84.25	83.92
9.50	0.10	8.48	81.86	0.06	76.69	87.99	87.65	87.31	86.96	86.62	86.27	85.93	85.59	85.24	84.90	84.55	84.21	83.87	83.52
10.00	0.10	8.11	81.74	0.06	84.40	87.74	87.39	87.03	86.67	86.31	85.95	85.60	85.24	84.88	84.52	84.16	83.81	83.45	83.09
10.50	0.10	7.73	81.61	0.05	92.84	87.47	87.10	86.72	86.35	85.98	85.60	85.23	84.86	84.48	84.11	83.74	83.36	82.99	82.62
11.00	0.10	7.36	81.48	0.05	102.12	87.17	86.78	86.39	86.00	85.61	85.22	84.83	84.44	84.05	83.66	83.27	82.88	82.49	82.10
11.50	0.10	6.99	81.36	0.05	112.38	86.84	86.43	86.02	85.61	85.20	84.79	84.38	83.98	83.57	83.16	82.75	82.34	81.93	81.52
12.00	0.10	6.62	81.23	0.05	123.77	86.47	86.04	85.61	85.18	84.75	84.32	83.89	83.46	83.03	82.60	82.17	81.74	81.31	80.89
12.50	0.10	6.25	81.11	0.04	136.49	86.05	85.60	85.15	84.70	84.25	83.79	83.34	82.89	82.44	81.98	81.53	81.08	80.63	80.17
13.00	0.10	5.88	80.98	0.04	150.79	85.59	85.11	84.63	84.16	83.68	83.20	82.72	82.24	81.76	81.29	80.81	80.33	79.85	79.37
13.50	0.10	5.51	80.85	0.04	166.99	85.07	84.56	84.05	83.54	83.04	82.53	82.02	81.51	81.00	80.50	79.99	79.48	78.97	78.47
14.00	0.10	5.13	80.73	0.04	185.48	84.47	83.92	83.38	82.84	82.30	81.76	81.22	80.68	80.14	79.60	79.05	78.51	77.97	77.43
14.50	0.10	4.76	80.60	0.03	206.80	83.77	83.20	82.62	82.04	81.46	80.88	80.30	79.72	79.14	78.56	77.98	77.40	76.82	76.24
15.00	0.10	4.39	80.48	0.03	231.64	82.97	82.34	81.72	81.09	80.47	79.85	79.22	78.60	77.97	77.35	76.72	76.10	75.47	74.85

COMBUSTION EFFICIENCY TABLE FOR NUMBER 2 OIL

Properties of Number 2 Oil:

Molecular Weight: $208.0 \frac{lb}{lbm\ mole}$

Specific Heat: $0.480 \frac{BTU}{lb\ R}$

Enthalpy of Formation: $-225 \frac{BTU}{lb}$

Higher Heating Value: $19512.0 \frac{BTU}{lb}$

Dry Products of Combustion						COMBUSTION EFFICIENCY *(Efficiencies are listed by flue gas temperature less surrounding temperature, °F)*													
$\%O_2$	$\%CO$	$\%CO_2$	$\%N_2$	$\%SO_2$	% Excess Air	310	320	330	340	350	360	370	380	390	400	410	420	430	440
0.00	0.10	15.53	84.26	0.11	-0.22	87.62	87.42	87.21	87.01	86.80	86.60	86.39	86.19	85.98	85.78	85.57	85.37	85.17	84.96
0.50	0.10	15.16	84.13	0.11	2.05	87.49	87.28	87.07	86.86	86.66	86.45	86.24	86.03	85.82	85.61	85.40	85.19	84.98	84.78
1.00	0.10	14.79	84.00	0.10	4.44	87.35	87.14	86.93	86.71	86.50	86.29	86.07	85.86	85.65	85.43	85.22	85.01	84.79	84.58
1.50	0.10	14.42	83.88	0.10	6.95	87.21	86.99	86.77	86.55	86.34	86.12	85.90	85.68	85.47	85.25	85.03	84.81	84.59	84.38
2.00	0.10	14.05	83.75	0.10	9.59	87.05	86.83	86.61	86.39	86.16	85.94	85.72	85.50	85.27	85.05	84.83	84.61	84.38	84.16
2.50	0.10	13.68	83.63	0.10	12.38	86.89	86.67	86.44	86.21	85.98	85.76	85.53	85.30	85.07	84.85	84.62	84.39	84.16	83.94
3.00	0.10	13.31	83.50	0.09	15.32	86.72	86.49	86.26	86.03	85.79	85.56	85.33	85.09	84.86	84.63	84.40	84.16	83.93	83.70
3.50	0.10	12.93	83.37	0.09	18.42	86.54	86.31	86.07	85.83	85.59	85.35	85.11	84.87	84.64	84.40	84.16	83.92	83.68	83.44
4.00	0.10	12.56	83.25	0.09	21.71	86.35	86.11	85.87	85.62	85.38	85.13	84.89	84.64	84.40	84.15	83.91	83.67	83.42	83.18
4.50	0.10	12.19	83.12	0.09	25.20	86.15	85.90	85.65	85.40	85.15	84.90	84.65	84.40	84.15	83.90	83.64	83.39	83.14	82.89
5.00	0.10	11.82	83.00	0.08	28.90	85.94	85.68	85.42	85.17	84.91	84.65	84.39	84.14	83.88	83.62	83.36	83.11	82.85	82.59
5.50	0.10	11.45	82.87	0.08	32.85	85.71	85.45	85.18	84.92	84.65	84.39	84.12	83.86	83.59	83.33	83.06	82.80	82.54	82.27
6.00	0.10	11.08	82.74	0.08	37.05	85.47	85.20	84.92	84.65	84.38	84.11	83.83	83.56	83.29	83.02	82.75	82.47	82.20	81.93
6.50	0.10	10.71	82.62	0.08	41.55	85.21	84.93	84.65	84.37	84.09	83.81	83.53	83.25	82.96	82.68	82.40	82.12	81.84	81.56
7.00	0.10	10.33	82.49	0.07	46.36	84.93	84.64	84.35	84.06	83.77	83.48	83.19	82.91	82.62	82.33	82.04	81.75	81.46	81.17
7.50	0.10	9.96	82.37	0.07	51.53	84.63	84.33	84.03	83.74	83.44	83.14	82.84	82.54	82.24	81.94	81.65	81.35	81.05	80.75
8.00	0.10	9.59	82.24	0.07	57.10	84.31	84.00	83.69	83.38	83.07	82.77	82.46	82.15	81.84	81.53	81.22	80.91	80.61	80.30
8.50	0.10	9.22	82.11	0.07	63.11	83.96	83.64	83.32	83.00	82.68	82.36	82.05	81.73	81.41	81.09	80.77	80.45	80.13	79.81
9.00	0.10	8.85	81.99	0.06	69.61	83.59	83.25	82.92	82.59	82.26	81.93	81.60	81.27	80.94	80.60	80.27	79.94	79.61	79.28
9.50	0.10	8.48	81.86	0.06	76.69	83.18	82.83	82.49	82.14	81.80	81.46	81.11	80.77	80.42	80.08	79.74	79.39	79.05	78.70
10.00	0.10	8.11	81.74	0.06	84.40	82.73	82.37	82.02	81.66	81.30	80.94	80.58	80.23	79.87	79.51	79.15	78.79	78.43	78.08
10.50	0.10	7.73	81.61	0.05	92.84	82.24	81.87	81.50	81.12	80.75	80.38	80.00	79.63	79.26	78.88	78.51	78.14	77.76	77.39
11.00	0.10	7.36	81.48	0.05	102.12	81.71	81.32	80.93	80.54	80.15	79.76	79.37	78.98	78.59	78.20	77.81	77.42	77.03	76.63
11.50	0.10	6.99	81.36	0.05	112.38	81.11	80.71	80.30	79.89	79.48	79.07	78.66	78.25	77.84	77.44	77.03	76.62	76.21	75.80
12.00	0.10	6.62	81.23	0.05	123.77	80.46	80.03	79.60	79.17	78.74	78.31	77.88	77.45	77.02	76.59	76.16	75.73	75.30	74.87
12.50	0.10	6.25	81.11	0.04	136.49	79.72	79.27	78.82	78.36	77.91	77.46	77.01	76.55	76.10	75.65	75.20	74.74	74.29	73.84
13.00	0.10	5.88	80.98	0.04	150.79	78.89	78.42	77.94	77.46	76.98	76.50	76.02	75.55	75.07	74.59	74.11	73.63	73.15	72.68
13.50	0.10	5.51	80.85	0.04	166.99	77.96	77.45	76.94	76.44	75.93	75.42	74.91	74.40	73.90	73.39	72.88	72.37	71.87	71.36
14.00	0.10	5.13	80.73	0.04	185.48	76.89	76.35	75.81	75.27	74.72	74.18	73.64	73.10	72.56	72.02	71.48	70.94	70.40	69.85
14.50	0.10	4.76	80.60	0.03	206.80	75.66	75.08	74.50	73.92	73.34	72.76	72.18	71.60	71.02	70.44	69.86	69.28	68.70	68.12
15.00	0.10	4.39	80.48	0.03	231.64	74.22	73.60	72.97	72.35	71.72	71.10	70.47	69.85	69.22	68.60	67.97	67.35	66.72	66.10

COMBUSTION EFFICIENCY TABLE FOR NUMBER 2 OIL

Properties of Number 2 Oil:

Molecular Weight: $208.0 \frac{lb}{lbm\ mole}$

Specific Heat: $0.480 \frac{BTU}{lb\ R}$

Enthalpy of Formation: $-225 \frac{BTU}{lb}$

Higher Heating Value: $19512.0 \frac{BTU}{lb}$

Dry Products of Combustion						COMBUSTION EFFICIENCY *(Efficiencies are listed by flue gas temperature less surrounding temperature, °F)*													
$\%O_2$	$\%CO$	$\%CO_2$	$\%N_2$	$\%SO_2$	% Excess Air	450	460	470	480	490	500	510	520	530	540	550	560	570	580
0.00	0.10	15.53	84.26	0.11	-0.22	84.76	84.55	84.35	84.14	83.94	83.73	83.53	83.32	83.12	82.91	82.71	82.50	82.30	82.10
0.50	0.10	15.16	84.13	0.11	2.05	84.57	84.36	84.15	83.94	83.73	83.52	83.31	83.11	82.90	82.69	82.48	82.27	82.06	81.85
1.00	0.10	14.79	84.00	0.10	4.44	84.37	84.16	83.94	83.73	83.52	83.30	83.09	82.88	82.66	82.45	82.24	82.02	81.81	81.60
1.50	0.10	14.42	83.88	0.10	6.95	84.16	83.94	83.72	83.51	83.29	83.07	82.85	82.64	82.42	82.20	81.98	81.76	81.55	81.33
2.00	0.10	14.05	83.75	0.10	9.59	83.94	83.72	83.49	83.27	83.05	82.83	82.60	82.38	82.16	81.94	81.71	81.49	81.27	81.05
2.50	0.10	13.68	83.63	0.10	12.38	83.71	83.48	83.25	83.03	82.80	82.57	82.34	82.12	81.89	81.66	81.43	81.21	80.98	80.75
3.00	0.10	13.31	83.50	0.09	15.32	83.46	83.23	83.00	82.77	82.53	82.30	82.07	81.83	81.60	81.37	81.14	80.90	80.67	80.44
3.50	0.10	12.93	83.37	0.09	18.42	83.21	82.97	82.73	82.49	82.25	82.01	81.77	81.54	81.30	81.06	80.82	80.58	80.34	80.11
4.00	0.10	12.56	83.25	0.09	21.71	82.93	82.69	82.44	82.20	81.95	81.71	81.47	81.22	80.98	80.73	80.49	80.24	80.00	79.75
4.50	0.10	12.19	83.12	0.09	25.20	82.64	82.39	82.14	81.89	81.64	81.39	81.14	80.89	80.64	80.38	80.13	79.88	79.63	79.38
5.00	0.10	11.82	83.00	0.08	28.90	82.33	82.08	81.82	81.56	81.30	81.05	80.79	80.53	80.27	80.02	79.76	79.50	79.24	78.99
5.50	0.10	11.45	82.87	0.08	32.85	82.01	81.74	81.48	81.21	80.95	80.68	80.42	80.15	79.89	79.62	79.36	79.10	78.83	78.57
6.00	0.10	11.08	82.74	0.08	37.05	81.66	81.38	81.11	80.84	80.57	80.29	80.02	79.75	79.48	79.21	78.93	78.66	78.39	78.12
6.50	0.10	10.71	82.62	0.08	41.55	81.28	81.00	80.72	80.44	80.16	79.88	79.60	79.32	79.04	78.76	78.48	78.20	77.92	77.64
7.00	0.10	10.33	82.49	0.07	46.36	80.88	80.59	80.30	80.01	79.73	79.44	79.15	78.86	78.57	78.28	77.99	77.70	77.41	77.12
7.50	0.10	9.96	82.37	0.07	51.53	80.45	80.15	79.86	79.56	79.26	78.96	78.66	78.36	78.06	77.77	77.47	77.17	76.87	76.57
8.00	0.10	9.59	82.24	0.07	57.10	79.99	79.68	79.37	79.06	78.76	78.45	78.14	77.83	77.52	77.21	76.90	76.60	76.29	75.98
8.50	0.10	9.22	82.11	0.07	63.11	79.49	79.17	78.85	78.53	78.21	77.89	77.57	77.25	76.93	76.61	76.30	75.98	75.66	75.34
9.00	0.10	8.85	81.99	0.06	69.61	78.95	78.62	78.29	77.95	77.62	77.29	76.96	76.63	76.30	75.97	75.64	75.30	74.97	74.64
9.50	0.10	8.48	81.86	0.06	76.69	78.36	78.02	77.67	77.33	76.98	76.64	76.30	75.95	75.61	75.26	74.92	74.58	74.23	73.89
10.00	0.10	8.11	81.74	0.06	84.40	77.72	77.36	77.00	76.64	76.29	75.93	75.57	75.21	74.85	74.50	74.14	73.78	73.42	73.06
10.50	0.10	7.73	81.61	0.05	92.84	77.02	76.64	76.27	75.90	75.52	75.15	74.78	74.40	74.03	73.66	73.28	72.91	72.54	72.16
11.00	0.10	7.36	81.48	0.05	102.12	76.24	75.85	75.46	75.07	74.68	74.29	73.90	73.51	73.12	72.73	72.34	71.95	71.56	71.17
11.50	0.10	6.99	81.36	0.05	112.38	75.39	74.98	74.57	74.17	73.76	73.35	72.94	72.53	72.12	71.71	71.30	70.90	70.49	70.08
12.00	0.10	6.62	81.23	0.05	123.77	74.44	74.02	73.59	73.16	72.73	72.30	71.87	71.44	71.01	70.58	70.15	69.72	69.29	68.86
12.50	0.10	6.25	81.11	0.04	136.49	73.39	72.93	72.48	72.03	71.58	71.12	70.67	70.22	69.77	69.32	68.86	68.41	67.96	67.51
13.00	0.10	5.88	80.98	0.04	150.79	72.20	71.72	71.24	70.76	70.28	69.81	69.33	68.85	68.37	67.89	67.41	66.94	66.46	65.98
13.50	0.10	5.51	80.85	0.04	166.99	70.85	70.34	69.84	69.33	68.82	68.31	67.80	67.30	66.79	66.28	65.77	65.27	64.76	64.25
14.00	0.10	5.13	80.73	0.04	185.48	69.31	68.77	68.23	67.69	67.15	66.61	66.07	65.52	64.98	64.44	63.90	63.36	62.82	62.28
14.50	0.10	4.76	80.60	0.03	206.80	67.54	66.96	66.38	65.80	65.22	64.64	64.06	63.48	62.90	62.32	61.74	61.16	60.58	60.00
15.00	0.10	4.39	80.48	0.03	231.64	65.47	64.85	64.22	63.60	62.97	62.35	61.72	61.10	60.47	59.85	59.23	58.60	57.98	57.35

COMBUSTION EFFICIENCY TABLE FOR NUMBER 2 OIL

Properties of Number 2 Oil:

Molecular Weight: 208.0 $\frac{lb}{lbm\ mole}$

Specific Heat: 0.480 $\frac{BTU}{lb\ R}$

Enthalpy of Formation: -225 $\frac{BTU}{lb}$

Higher Heating Value: 19512.0 $\frac{BTU}{lb}$

Dry Products of Combustion						COMBUSTION EFFICIENCY *(Efficiencies are listed by flue gas temperature less surrounding temperature, °F)*													
$\%O_2$	$\%CO$	$\%CO_2$	$\%N_2$	$\%SO_2$	% Excess Air	590	600	610	620	630	640	650	660	670	680	690	700	710	720
0.00	0.10	15.53	84.26	0.11	-0.22	81.89	81.69	81.48	81.28	81.07	80.87	80.66	80.46	80.25	80.05	79.84	79.64	79.43	79.23
0.50	0.10	15.16	84.13	0.11	2.05	81.64	81.43	81.23	81.02	80.81	80.60	80.39	80.18	79.97	79.76	79.56	79.35	79.14	78.93
1.00	0.10	14.79	84.00	0.10	4.44	81.38	81.17	80.96	80.74	80.53	80.32	80.11	79.89	79.68	79.47	79.25	79.04	78.83	78.61
1.50	0.10	14.42	83.88	0.10	6.95	81.11	80.89	80.68	80.46	80.24	80.02	79.81	79.59	79.37	79.15	78.93	78.72	78.50	78.28
2.00	0.10	14.05	83.75	0.10	9.59	80.82	80.60	80.38	80.16	79.94	79.71	79.49	79.27	79.05	78.82	78.60	78.38	78.16	77.93
2.50	0.10	13.68	83.63	0.10	12.38	80.52	80.30	80.07	79.84	79.61	79.39	79.16	78.93	78.70	78.47	78.25	78.02	77.79	77.56
3.00	0.10	13.31	83.50	0.09	15.32	80.20	79.97	79.74	79.51	79.27	79.04	78.81	78.57	78.34	78.11	77.88	77.64	77.41	77.18
3.50	0.10	12.93	83.37	0.09	18.42	79.87	79.63	79.39	79.15	78.91	78.67	78.44	78.20	77.96	77.72	77.48	77.24	77.00	76.77
4.00	0.10	12.56	83.25	0.09	21.71	79.51	79.27	79.02	78.78	78.53	78.29	78.04	77.80	77.55	77.31	77.07	76.82	76.58	76.33
4.50	0.10	12.19	83.12	0.09	25.20	79.13	78.88	78.63	78.38	78.13	77.88	77.63	77.38	77.13	76.87	76.62	76.37	76.12	75.87
5.00	0.10	11.82	83.00	0.08	28.90	78.73	78.47	78.21	77.96	77.70	77.44	77.18	76.93	76.67	76.41	76.15	75.90	75.64	75.38
5.50	0.10	11.45	82.87	0.08	32.85	78.30	78.04	77.77	77.51	77.24	76.98	76.71	76.45	76.18	75.92	75.65	75.39	75.13	74.86
6.00	0.10	11.08	82.74	0.08	37.05	77.84	77.57	77.30	77.03	76.76	76.48	76.21	75.94	75.67	75.39	75.12	74.85	74.58	74.31
6.50	0.10	10.71	82.62	0.08	41.55	77.36	77.08	76.80	76.52	76.24	75.96	75.67	75.39	75.11	74.83	74.55	74.27	73.99	73.71
7.00	0.10	10.33	82.49	0.07	46.36	76.83	76.55	76.26	75.97	75.68	75.39	75.10	74.81	74.52	74.23	73.94	73.65	73.37	73.08
7.50	0.10	9.96	82.37	0.07	51.53	76.27	75.97	75.68	75.38	75.08	74.78	74.48	74.18	73.89	73.59	73.29	72.99	72.69	72.39
8.00	0.10	9.59	82.24	0.07	57.10	75.67	75.36	75.05	74.74	74.44	74.13	73.82	73.51	73.20	72.89	72.58	72.28	71.97	71.66
8.50	0.10	9.22	82.11	0.07	63.11	75.02	74.70	74.38	74.06	73.74	73.42	73.10	72.78	72.46	72.14	71.82	71.50	71.18	70.86
9.00	0.10	8.85	81.99	0.06	69.61	74.31	73.98	73.65	73.32	72.99	72.65	72.32	71.99	71.66	71.33	71.00	70.67	70.34	70.00
9.50	0.10	8.48	81.86	0.06	76.69	73.54	73.20	72.86	72.51	72.17	71.82	71.48	71.14	70.79	70.45	70.10	69.76	69.41	69.07
10.00	0.10	8.11	81.74	0.06	84.40	72.71	72.35	71.99	71.63	71.27	70.92	70.56	70.20	69.84	69.48	69.13	68.77	68.41	68.05
10.50	0.10	7.73	81.61	0.05	92.84	71.79	71.42	71.04	70.67	70.30	69.92	69.55	69.18	68.80	68.43	68.06	67.68	67.31	66.94
11.00	0.10	7.36	81.48	0.05	102.12	70.78	70.39	70.00	69.61	69.22	68.83	68.44	68.05	67.66	67.27	66.88	66.49	66.10	65.71
11.50	0.10	6.99	81.36	0.05	112.38	69.67	69.26	68.85	68.44	68.03	67.63	67.22	66.81	66.40	65.99	65.58	65.17	64.76	64.36
12.00	0.10	6.62	81.23	0.05	123.77	68.43	68.00	67.57	67.15	66.72	66.29	65.86	65.43	65.00	64.57	64.14	63.71	63.28	62.85
12.50	0.10	6.25	81.11	0.04	136.49	67.05	66.60	66.15	65.70	65.24	64.79	64.34	63.89	63.43	62.98	62.53	62.08	61.62	61.17
13.00	0.10	5.88	80.98	0.04	150.79	65.50	65.02	64.54	64.07	63.59	63.11	62.63	62.15	61.67	61.20	60.72	60.24	59.76	59.28
13.50	0.10	5.51	80.85	0.04	166.99	63.74	63.24	62.73	62.22	61.71	61.20	60.70	60.19	59.68	59.17	58.67	58.16	57.65	57.14
14.00	0.10	5.13	80.73	0.04	185.48	61.74	61.19	60.65	60.11	59.57	59.03	58.49	57.95	57.41	56.87	56.32	55.78	55.24	54.70
14.50	0.10	4.76	80.60	0.03	206.80	59.42	58.84	58.26	57.68	57.10	56.52	55.94	55.36	54.78	54.20	53.62	53.04	52.46	51.88
15.00	0.10	4.39	80.48	0.03	231.64	56.73	56.10	55.48	54.85	54.23	53.60	52.98	52.35	51.73	51.10	50.48	49.85	49.23	48.60

COMBUSTION EFFICIENCY TABLE FOR NUMBER 2 OIL

Properties of Number 2 Oil:

Molecular Weight: 208.0 $\frac{lb}{lbm\ mole}$

Specific Heat: 0.480 $\frac{BTU}{lb\ R}$

Enthalpy of Formation: -225 $\frac{BTU}{lb}$

Higher Heating Value: 19512.0 $\frac{BTU}{lb}$

Dry Products of Combustion						COMBUSTION EFFICIENCY *(Efficiencies are listed by flue gas temperature less surrounding temperature, °F)*													
$\%O_2$	$\%CO$	$\%CO_2$	$\%N_2$	$\%SO_2$	% Excess Air	170	180	190	200	210	220	230	240	250	260	270	280	290	300
0.00	0.50	15.25	84.14	0.11	-1.10	89.94	89.74	89.54	89.33	89.13	88.93	88.72	88.52	88.32	88.11	87.91	87.71	87.50	87.30
0.50	0.50	14.88	84.01	0.11	1.13	89.86	89.65	89.44	89.23	89.03	88.82	88.61	88.41	88.20	87.99	87.78	87.58	87.37	87.16
1.00	0.50	14.51	83.89	0.11	3.48	89.76	89.55	89.34	89.13	88.92	88.71	88.50	88.28	88.07	87.86	87.65	87.44	87.23	87.02
1.50	0.50	14.14	83.76	0.10	5.94	89.67	89.45	89.24	89.02	88.81	88.59	88.37	88.16	87.94	87.73	87.51	87.29	87.08	86.86
2.00	0.50	13.77	83.63	0.10	8.54	89.57	89.35	89.13	88.91	88.69	88.47	88.25	88.03	87.80	87.58	87.36	87.14	86.92	86.70
2.50	0.50	13.39	83.51	0.10	11.27	89.46	89.24	89.01	88.79	88.56	88.34	88.11	87.88	87.66	87.43	87.21	86.98	86.76	86.53
3.00	0.50	13.02	83.38	0.09	14.15	89.35	89.12	88.89	88.66	88.43	88.20	87.97	87.74	87.51	87.28	87.04	86.81	86.58	86.35
3.50	0.50	12.65	83.26	0.09	17.20	89.23	89.00	88.76	88.53	88.29	88.06	87.82	87.58	87.34	87.11	86.87	86.64	86.40	86.16
4.00	0.50	12.28	83.13	0.09	20.42	89.11	88.87	88.63	88.38	88.14	87.90	87.66	87.42	87.17	86.93	86.69	86.45	86.20	85.96
4.50	0.50	11.91	83.00	0.09	23.84	88.98	88.73	88.48	88.23	87.98	87.74	87.49	87.24	86.99	86.74	86.50	86.25	86.00	85.75
5.00	0.50	11.54	82.88	0.08	27.47	88.84	88.58	88.33	88.07	87.82	87.56	87.31	87.05	86.80	86.54	86.29	86.03	85.78	85.52
5.50	0.50	11.17	82.75	0.08	31.32	88.69	88.43	88.17	87.90	87.64	87.38	87.12	86.86	86.59	86.33	86.07	85.81	85.55	85.28
6.00	0.50	10.79	82.63	0.08	35.44	88.53	88.26	87.99	87.72	87.45	87.18	86.91	86.64	86.38	86.11	85.84	85.57	85.30	85.03
6.50	0.50	10.42	82.50	0.08	39.83	88.36	88.08	87.81	87.53	87.25	86.97	86.70	86.42	86.14	85.87	85.59	85.31	85.03	84.76
7.00	0.50	10.05	82.37	0.07	44.53	88.18	87.89	87.61	87.32	87.04	86.75	86.46	86.18	85.89	85.61	85.32	85.04	84.75	84.46
7.50	0.50	9.68	82.25	0.07	49.57	87.98	87.69	87.39	87.10	86.80	86.51	86.21	85.92	85.62	85.33	85.03	84.74	84.45	84.15
8.00	0.50	9.31	82.12	0.07	54.99	87.77	87.47	87.17	86.86	86.56	86.25	85.95	85.64	85.34	85.03	84.73	84.42	84.12	83.81
8.50	0.50	8.94	82.00	0.07	60.85	87.55	87.23	86.92	86.60	86.29	85.97	85.66	85.34	85.03	84.71	84.40	84.08	83.76	83.45
9.00	0.50	8.57	81.87	0.06	67.18	87.30	86.98	86.65	86.32	86.00	85.67	85.34	85.02	84.69	84.36	84.04	83.71	83.38	83.06
9.50	0.50	8.19	81.74	0.06	74.05	87.04	86.70	86.36	86.02	85.68	85.34	85.00	84.66	84.32	83.99	83.65	83.31	82.97	82.63
10.00	0.50	7.82	81.62	0.06	81.53	86.75	86.40	86.04	85.69	85.34	84.99	84.63	84.28	83.93	83.57	83.22	82.87	82.52	82.16
10.50	0.50	7.45	81.49	0.06	89.72	86.43	86.07	85.70	85.33	84.96	84.59	84.23	83.86	83.49	83.12	82.76	82.39	82.02	81.65
11.00	0.50	7.08	81.37	0.05	98.71	86.09	85.70	85.32	84.93	84.55	84.17	83.78	83.40	83.01	82.63	82.25	81.86	81.48	81.09
11.50	0.50	6.71	81.24	0.05	108.62	85.70	85.30	84.90	84.50	84.10	83.69	83.29	82.89	82.49	82.09	81.68	81.28	80.88	80.48
12.00	0.50	6.34	81.11	0.05	119.61	85.28	84.86	84.44	84.01	83.59	83.17	82.75	82.33	81.90	81.48	81.06	80.64	80.22	79.79
12.50	0.50	5.97	80.99	0.05	131.86	84.81	84.36	83.92	83.47	83.03	82.59	82.14	81.70	81.25	80.81	80.37	79.92	79.48	79.03
13.00	0.50	5.60	80.86	0.04	145.60	84.27	83.81	83.34	82.87	82.40	81.93	81.46	80.99	80.52	80.05	79.59	79.12	78.65	78.18
13.50	0.50	5.22	80.74	0.04	161.13	83.67	83.18	82.68	82.18	81.69	81.19	80.69	80.20	79.70	79.20	78.70	78.21	77.71	77.21
14.00	0.50	4.85	80.61	0.04	178.81	82.99	82.46	81.93	81.40	80.88	80.35	79.82	79.29	78.76	78.23	77.70	77.17	76.64	76.11
14.50	0.50	4.48	80.48	0.03	199.13	82.21	81.64	81.07	80.51	79.94	79.38	78.81	78.25	77.68	77.11	76.55	75.98	75.42	74.85
15.00	0.50	4.11	80.36	0.03	222.73	81.30	80.69	80.08	79.47	78.86	78.25	77.64	77.03	76.43	75.82	75.21	74.60	73.99	73.38

COMBUSTION EFFICIENCY TABLE FOR NUMBER 2 OIL

Properties of Number 2 Oil:

Molecular Weight: $208.0 \frac{lb}{lbm\ mole}$

Specific Heat: $0.480 \frac{BTU}{lb\ R}$

Enthalpy of Formation: $-225 \frac{BTU}{lb}$

Higher Heating Value: $19512.0 \frac{BTU}{lb}$

Dry Products of Combustion						COMBUSTION EFFICIENCY *(Efficiencies are listed by flue gas temperature less surrounding temperature, °F)*													
$\%O_2$	$\%CO$	$\%CO_2$	$\%N_2$	$\%SO_2$	% Excess Air	310	320	330	340	350	360	370	380	390	400	410	420	430	440
0.00	0.50	15.25	84.14	0.11	-1.10	87.10	86.90	86.69	86.49	86.29	86.08	85.88	85.68	85.47	85.27	85.07	84.86	84.66	84.46
0.50	0.50	14.88	84.01	0.11	1.13	86.96	86.75	86.54	86.33	86.13	85.92	85.71	85.51	85.30	85.09	84.88	84.68	84.47	84.26
1.00	0.50	14.51	83.89	0.11	3.48	86.81	86.59	86.38	86.17	85.96	85.75	85.54	85.33	85.11	84.90	84.69	84.48	84.27	84.06
1.50	0.50	14.14	83.76	0.10	5.94	86.65	86.43	86.22	86.00	85.78	85.57	85.35	85.14	84.92	84.70	84.49	84.27	84.06	83.84
2.00	0.50	13.77	83.63	0.10	8.54	86.48	86.26	86.04	85.82	85.60	85.38	85.16	84.94	84.72	84.50	84.28	84.05	83.83	83.61
2.50	0.50	13.39	83.51	0.10	11.27	86.31	86.08	85.86	85.63	85.40	85.18	84.95	84.73	84.50	84.28	84.05	83.83	83.60	83.37
3.00	0.50	13.02	83.38	0.09	14.15	86.12	85.89	85.66	85.43	85.20	84.97	84.74	84.51	84.28	84.04	83.81	83.58	83.35	83.12
3.50	0.50	12.65	83.26	0.09	17.20	85.93	85.69	85.45	85.22	84.98	84.75	84.51	84.27	84.04	83.80	83.56	83.33	83.09	82.86
4.00	0.50	12.28	83.13	0.09	20.42	85.72	85.48	85.24	84.99	84.75	84.51	84.27	84.03	83.78	83.54	83.30	83.06	82.82	82.57
4.50	0.50	11.91	83.00	0.09	23.84	85.50	85.25	85.01	84.76	84.51	84.26	84.01	83.76	83.52	83.27	83.02	82.77	82.52	82.27
5.00	0.50	11.54	82.88	0.08	27.47	85.27	85.01	84.76	84.51	84.25	84.00	83.74	83.49	83.23	82.98	82.72	82.47	82.21	81.96
5.50	0.50	11.17	82.75	0.08	31.32	85.02	84.76	84.50	84.24	83.98	83.71	83.45	83.19	82.93	82.67	82.40	82.14	81.88	81.62
6.00	0.50	10.79	82.63	0.08	35.44	84.76	84.49	84.22	83.95	83.68	83.41	83.14	82.87	82.61	82.34	82.07	81.80	81.53	81.26
6.50	0.50	10.42	82.50	0.08	39.83	84.48	84.20	83.92	83.65	83.37	83.09	82.82	82.54	82.26	81.98	81.71	81.43	81.15	80.87
7.00	0.50	10.05	82.37	0.07	44.53	84.18	83.89	83.61	83.32	83.03	82.75	82.46	82.18	81.89	81.61	81.32	81.03	80.75	80.46
7.50	0.50	9.68	82.25	0.07	49.57	83.86	83.56	83.27	82.97	82.68	82.38	82.09	81.79	81.50	81.20	80.91	80.61	80.32	80.02
8.00	0.50	9.31	82.12	0.07	54.99	83.51	83.20	82.90	82.59	82.29	81.98	81.68	81.37	81.07	80.77	80.46	80.16	79.85	79.55
8.50	0.50	8.94	82.00	0.07	60.85	83.13	82.82	82.50	82.19	81.87	81.56	81.24	80.93	80.61	80.30	79.98	79.66	79.35	79.03
9.00	0.50	8.57	81.87	0.06	67.18	82.73	82.40	82.07	81.75	81.42	81.09	80.77	80.44	80.11	79.79	79.46	79.13	78.81	78.48
9.50	0.50	8.19	81.74	0.06	74.05	82.29	81.95	81.61	81.27	80.93	80.59	80.25	79.91	79.57	79.24	78.90	78.56	78.22	77.88
10.00	0.50	7.82	81.62	0.06	81.53	81.81	81.46	81.10	80.75	80.40	80.05	79.69	79.34	78.99	78.63	78.28	77.93	77.58	77.22
10.50	0.50	7.45	81.49	0.06	89.72	81.29	80.92	80.55	80.18	79.82	79.45	79.08	78.71	78.34	77.98	77.61	77.24	76.87	76.51
11.00	0.50	7.08	81.37	0.05	98.71	80.71	80.33	79.94	79.56	79.17	78.79	78.41	78.02	77.64	77.26	76.87	76.49	76.10	75.72
11.50	0.50	6.71	81.24	0.05	108.62	80.08	79.67	79.27	78.87	78.47	78.07	77.66	77.26	76.86	76.46	76.06	75.66	75.25	74.85
12.00	0.50	6.34	81.11	0.05	119.61	79.37	78.95	78.53	78.11	77.69	77.26	76.84	76.42	76.00	75.58	75.15	74.73	74.31	73.89
12.50	0.50	5.97	80.99	0.05	131.86	78.59	78.15	77.70	77.26	76.81	76.37	75.92	75.48	75.04	74.59	74.15	73.70	73.26	72.82
13.00	0.50	5.60	80.86	0.04	145.60	77.71	77.24	76.77	76.30	75.83	75.36	74.90	74.43	73.96	73.49	73.02	72.55	72.08	71.61
13.50	0.50	5.22	80.74	0.04	161.13	76.72	76.22	75.72	75.22	74.73	74.23	73.73	73.24	72.74	72.24	71.74	71.25	70.75	70.25
14.00	0.50	4.85	80.61	0.04	178.81	75.58	75.05	74.53	74.00	73.47	72.94	72.41	71.88	71.35	70.82	70.29	69.76	69.23	68.71
14.50	0.50	4.48	80.48	0.03	199.13	74.28	73.72	73.15	72.59	72.02	71.45	70.89	70.32	69.76	69.19	68.62	68.06	67.49	66.93
15.00	0.50	4.11	80.36	0.03	222.73	72.77	72.17	71.56	70.95	70.34	69.73	69.12	68.51	67.90	67.30	66.69	66.08	65.47	64.86

COMBUSTION EFFICIENCY TABLE FOR NUMBER 2 OIL

Properties of Number 2 Oil:

Molecular Weight: $208.0 \frac{lb}{lbm\ mole}$

Specific Heat: $0.480 \frac{BTU}{lb\ R}$

Enthalpy of Formation: $-225 \frac{BTU}{lb}$

Higher Heating Value: $19512.0 \frac{BTU}{lb}$

Dry Products of Combustion						COMBUSTION EFFICIENCY *(Efficiencies are listed by flue gas temperature less surrounding temperature, °F)*													
$\%O_2$	$\%CO$	$\%CO_2$	$\%N_2$	$\%SO_2$	% Excess Air	450	460	470	480	490	500	510	520	530	540	550	560	570	580
0.00	0.50	15.25	84.14	0.11	-1.10	84.25	84.05	83.85	83.65	83.44	83.24	83.04	82.83	82.63	82.43	82.22	82.02	81.82	81.61
0.50	0.50	14.88	84.01	0.11	1.13	84.06	83.85	83.64	83.43	83.23	83.02	82.81	82.61	82.40	82.19	81.98	81.78	81.57	81.36
1.00	0.50	14.51	83.89	0.11	3.48	83.85	83.63	83.42	83.21	83.00	82.79	82.58	82.37	82.15	81.94	81.73	81.52	81.31	81.10
1.50	0.50	14.14	83.76	0.10	5.94	83.62	83.41	83.19	82.98	82.76	82.55	82.33	82.11	81.90	81.68	81.47	81.25	81.03	80.82
2.00	0.50	13.77	83.63	0.10	8.54	83.39	83.17	82.95	82.73	82.51	82.29	82.07	81.85	81.63	81.41	81.19	80.97	80.75	80.53
2.50	0.50	13.39	83.51	0.10	11.27	83.15	82.92	82.70	82.47	82.25	82.02	81.80	81.57	81.34	81.12	80.89	80.67	80.44	80.22
3.00	0.50	13.02	83.38	0.09	14.15	82.89	82.66	82.43	82.20	81.97	81.74	81.51	81.28	81.05	80.81	80.58	80.35	80.12	79.89
3.50	0.50	12.65	83.26	0.09	17.20	82.62	82.38	82.15	81.91	81.67	81.44	81.20	80.97	80.73	80.49	80.26	80.02	79.78	79.55
4.00	0.50	12.28	83.13	0.09	20.42	82.33	82.09	81.85	81.60	81.36	81.12	80.88	80.64	80.39	80.15	79.91	79.67	79.43	79.18
4.50	0.50	11.91	83.00	0.09	23.84	82.03	81.78	81.53	81.28	81.03	80.78	80.54	80.29	80.04	79.79	79.54	79.29	79.05	78.80
5.00	0.50	11.54	82.88	0.08	27.47	81.70	81.45	81.19	80.94	80.68	80.43	80.17	79.92	79.66	79.41	79.15	78.90	78.64	78.39
5.50	0.50	11.17	82.75	0.08	31.32	81.36	81.10	80.83	80.57	80.31	80.05	79.79	79.52	79.26	79.00	78.74	78.48	78.21	77.95
6.00	0.50	10.79	82.63	0.08	35.44	80.99	80.72	80.45	80.18	79.91	79.64	79.37	79.10	78.84	78.57	78.30	78.03	77.76	77.49
6.50	0.50	10.42	82.50	0.08	39.83	80.60	80.32	80.04	79.77	79.49	79.21	78.93	78.66	78.38	78.10	77.82	77.55	77.27	76.99
7.00	0.50	10.05	82.37	0.07	44.53	80.18	79.89	79.61	79.32	79.03	78.75	78.46	78.18	77.89	77.61	77.32	77.03	76.75	76.46
7.50	0.50	9.68	82.25	0.07	49.57	79.73	79.43	79.14	78.84	78.55	78.25	77.96	77.66	77.37	77.07	76.78	76.48	76.19	75.89
8.00	0.50	9.31	82.12	0.07	54.99	79.24	78.94	78.63	78.33	78.02	77.72	77.41	77.11	76.80	76.50	76.19	75.89	75.58	75.28
8.50	0.50	8.94	82.00	0.07	60.85	78.72	78.40	78.09	77.77	77.46	77.14	76.83	76.51	76.20	75.88	75.57	75.25	74.93	74.62
9.00	0.50	8.57	81.87	0.06	67.18	78.15	77.83	77.50	77.17	76.85	76.52	76.19	75.87	75.54	75.21	74.88	74.56	74.23	73.90
9.50	0.50	8.19	81.74	0.06	74.05	77.54	77.20	76.86	76.52	76.18	75.84	75.50	75.16	74.82	74.49	74.15	73.81	73.47	73.13
10.00	0.50	7.82	81.62	0.06	81.53	76.87	76.52	76.16	75.81	75.46	75.11	74.75	74.40	74.05	73.69	73.34	72.99	72.64	72.28
10.50	0.50	7.45	81.49	0.06	89.72	76.14	75.77	75.40	75.04	74.67	74.30	73.93	73.56	73.20	72.83	72.46	72.09	71.73	71.36
11.00	0.50	7.08	81.37	0.05	98.71	75.34	74.95	74.57	74.18	73.80	73.42	73.03	72.65	72.26	71.88	71.50	71.11	70.73	70.34
11.50	0.50	6.71	81.24	0.05	108.62	74.45	74.05	73.65	73.24	72.84	72.44	72.04	71.64	71.23	70.83	70.43	70.03	69.63	69.22
12.00	0.50	6.34	81.11	0.05	119.61	73.47	73.05	72.62	72.20	71.78	71.36	70.94	70.51	70.09	69.67	69.25	68.83	68.41	67.98
12.50	0.50	5.97	80.99	0.05	131.86	72.37	71.93	71.48	71.04	70.60	70.15	69.71	69.26	68.82	68.38	67.93	67.49	67.04	66.60
13.00	0.50	5.60	80.86	0.04	145.60	71.14	70.68	70.21	69.74	69.27	68.80	68.33	67.86	67.39	66.92	66.45	65.99	65.52	65.05
13.50	0.50	5.22	80.74	0.04	161.13	69.76	69.28	68.76	68.27	67.77	67.27	66.77	66.28	65.78	65.28	64.79	64.29	63.79	63.29
14.00	0.50	4.85	80.61	0.04	178.81	68.18	67.65	67.12	66.59	66.06	65.53	65.00	64.47	63.94	63.41	62.89	62.36	61.83	61.30
14.50	0.50	4.48	80.48	0.03	199.13	66.36	65.79	65.23	64.66	64.10	63.53	62.96	62.40	61.83	61.27	60.70	60.14	59.57	59.00
15.00	0.50	4.11	80.36	0.03	222.73	64.25	63.64	63.03	62.43	61.82	61.21	60.60	59.99	59.38	58.77	58.17	57.56	56.95	56.34

COMBUSTION EFFICIENCY TABLE FOR NUMBER 2 OIL

Properties of Number 2 Oil:

Molecular Weight: 208.0 $\frac{\text{lb}}{\text{lbm mole}}$

Specific Heat: 0.480 $\frac{\text{BTU}}{\text{lb R}}$

Enthalpy of Formation: -225 $\frac{\text{BTU}}{\text{lb}}$

Higher Heating Value: 19512.0 $\frac{\text{BTU}}{\text{lb}}$

Dry Products of Combustion						COMBUSTION EFFICIENCY *(Efficiencies are listed by flue gas temperature less surrounding temperature, °F)*													
$\%O_2$	$\%CO$	$\%CO_2$	$\%N_2$	$\%SO_2$	% Excess Air	590	600	610	620	630	640	650	660	670	680	690	700	710	720
0.00	0.50	15.25	84.14	0.11	-1.10	81.41	81.21	81.01	80.80	80.60	80.40	80.19	79.99	79.79	79.58	79.38	79.18	78.97	78.77
0.50	0.50	14.88	84.01	0.11	1.13	81.16	80.95	80.74	80.53	80.33	80.12	79.91	79.70	79.50	79.29	79.08	78.88	78.67	78.46
1.00	0.50	14.51	83.89	0.11	3.48	80.89	80.67	80.46	80.25	80.04	79.83	79.62	79.41	79.19	78.98	78.77	78.56	78.35	78.14
1.50	0.50	14.14	83.76	0.10	5.94	80.60	80.39	80.17	79.96	79.74	79.52	79.31	79.09	78.88	78.66	78.44	78.23	78.01	77.80
2.00	0.50	13.77	83.63	0.10	8.54	80.31	80.08	79.86	79.64	79.42	79.20	78.98	78.76	78.54	78.32	78.10	77.88	77.66	77.44
2.50	0.50	13.39	83.51	0.10	11.27	79.99	79.77	79.54	79.32	79.09	78.86	78.64	78.41	78.19	77.96	77.74	77.51	77.29	77.06
3.00	0.50	13.02	83.38	0.09	14.15	79.66	79.43	79.20	78.97	78.74	78.51	78.28	78.05	77.81	77.58	77.36	77.12	76.89	76.66
3.50	0.50	12.65	83.26	0.09	17.20	79.31	79.08	78.84	78.60	78.37	78.13	77.89	77.66	77.42	77.18	76.95	76.71	76.48	76.24
4.00	0.50	12.28	83.13	0.09	20.42	78.94	78.70	78.46	78.22	77.97	77.73	77.49	77.25	77.00	76.76	76.52	76.28	76.04	75.79
4.50	0.50	11.91	83.00	0.09	23.84	78.55	78.30	78.05	77.80	77.56	77.31	77.06	76.81	76.56	76.31	76.07	75.82	75.57	75.32
5.00	0.50	11.54	82.88	0.08	27.47	78.13	77.88	77.62	77.37	77.11	76.86	76.60	76.35	76.09	75.84	75.58	75.33	75.08	74.82
5.50	0.50	11.17	82.75	0.08	31.32	77.69	77.43	77.17	76.91	76.64	76.38	76.12	75.86	75.60	75.33	75.07	74.81	74.55	74.29
6.00	0.50	10.79	82.63	0.08	35.44	77.22	76.95	76.68	76.41	76.14	75.87	75.60	75.33	75.06	74.80	74.53	74.26	73.99	73.72
6.50	0.50	10.42	82.50	0.08	39.83	76.72	76.44	76.16	75.88	75.61	75.33	75.05	74.77	74.50	74.22	73.94	73.67	73.39	73.11
7.00	0.50	10.05	82.37	0.07	44.53	76.18	75.89	75.60	75.32	75.03	74.75	74.46	74.18	73.89	73.60	73.32	73.03	72.75	72.46
7.50	0.50	9.68	82.25	0.07	49.57	75.60	75.30	75.01	74.71	74.42	74.12	73.83	73.53	73.24	72.94	72.65	72.35	72.06	71.76
8.00	0.50	9.31	82.12	0.07	54.99	74.98	74.67	74.37	74.06	73.76	73.45	73.15	72.84	72.54	72.23	71.93	71.62	71.32	71.01
8.50	0.50	8.94	82.00	0.07	60.85	74.30	73.99	73.67	73.36	73.04	72.73	72.41	72.10	71.78	71.47	71.15	70.83	70.52	70.20
9.00	0.50	8.57	81.87	0.06	67.18	73.58	73.25	72.92	72.60	72.27	71.94	71.62	71.29	70.96	70.64	70.31	69.98	69.66	69.33
9.50	0.50	8.19	81.74	0.06	74.05	72.79	72.45	72.11	71.77	71.43	71.09	70.75	70.41	70.07	69.74	69.40	69.06	68.72	68.38
10.00	0.50	7.82	81.62	0.06	81.53	71.93	71.58	71.22	70.87	70.52	70.17	69.81	69.46	69.11	68.75	68.40	68.05	67.70	67.34
10.50	0.50	7.45	81.49	0.06	89.72	70.99	70.62	70.26	69.89	69.52	69.15	68.78	68.42	68.05	67.68	67.31	66.95	66.58	66.21
11.00	0.50	7.08	81.37	0.05	98.71	69.96	69.58	69.19	68.81	68.42	68.04	67.66	67.27	66.89	66.50	66.12	65.74	65.35	64.97
11.50	0.50	6.71	81.24	0.05	108.62	68.82	68.42	68.02	67.62	67.21	66.81	66.41	66.01	65.61	65.21	64.80	64.40	64.00	63.60
12.00	0.50	6.34	81.11	0.05	119.61	67.56	67.14	66.72	66.30	65.87	65.45	65.03	64.61	64.19	63.77	63.34	62.92	62.50	62.08
12.50	0.50	5.97	80.99	0.05	131.86	66.16	65.71	65.27	64.82	64.38	63.94	63.49	63.05	62.60	62.16	61.72	61.27	60.83	60.38
13.00	0.50	5.60	80.86	0.04	145.60	64.58	64.11	63.64	63.17	62.70	62.23	61.77	61.30	60.83	60.36	59.89	59.42	58.95	58.48
13.50	0.50	5.22	80.74	0.04	161.13	62.80	62.30	61.80	61.31	60.81	60.31	59.82	59.32	58.82	58.32	57.83	57.33	56.83	56.34
14.00	0.50	4.85	80.61	0.04	178.81	60.77	60.24	59.71	59.18	58.65	58.12	57.59	57.07	56.54	56.01	55.48	54.95	54.42	53.89
14.50	0.50	4.48	80.48	0.03	199.13	58.44	57.87	57.31	56.74	56.17	55.61	55.04	54.48	53.91	53.34	52.78	52.21	51.65	51.08
15.00	0.50	4.11	80.36	0.03	222.73	55.73	55.12	54.51	53.90	53.30	52.69	52.08	51.47	50.86	50.25	49.64	49.03	48.43	47.82

COMBUSTION EFFICIENCY TABLE FOR NUMBER 6 OIL

Properties of Number 6 Oil:

Molecular Weight: 338.0 $\frac{lb}{lbm\ mole}$

Specific Heat: 0.480 $\frac{BTU}{lb\ R}$

Enthalpy of Formation: -167 $\frac{BTU}{lb}$

Higher Heating Value: 18300.0 $\frac{BTU}{lb}$

Dry Products of Combustion						COMBUSTION EFFICIENCY *(Efficiencies are listed by flue gas temperature less surrounding temperature, °F)*													
$\%O_2$	$\%CO$	$\%CO_2$	$\%N_2$	$\%SO_2$	% Excess Air	170	180	190	200	210	220	230	240	250	260	270	280	290	300
0.00	0.00	16.61	83.39	0.10	-0.00	91.32	91.12	90.91	90.70	90.50	90.29	90.08	89.88	89.67	89.46	89.26	89.05	88.84	88.64
0.50	0.00	16.11	83.29	0.10	2.31	91.25	91.04	90.83	90.62	90.41	90.20	89.98	89.77	89.56	89.35	89.14	88.93	88.72	88.51
1.00	0.00	15.72	83.18	0.09	4.73	91.17	90.96	90.74	90.53	90.31	90.10	89.88	89.67	89.45	89.24	89.02	88.81	88.59	88.37
1.50	0.00	15.33	83.08	0.09	7.28	91.09	90.87	90.65	90.43	90.21	89.99	89.77	89.55	89.33	89.11	88.89	88.67	88.45	88.23
2.00	0.00	14.94	82.97	0.09	9.96	91.01	90.79	90.56	90.34	90.11	89.89	89.66	89.44	89.21	88.99	88.76	88.54	88.31	88.09
2.50	0.00	14.54	82.87	0.09	12.78	90.92	90.69	90.46	90.23	90.00	89.77	89.54	89.31	89.08	88.85	88.62	88.39	88.16	87.93
3.00	0.00	14.15	82.77	0.08	15.77	90.83	90.59	90.36	90.12	89.89	89.65	89.41	89.18	88.94	88.71	88.47	88.24	88.00	87.77
3.50	0.00	13.76	82.66	0.08	18.92	90.73	90.49	90.25	90.01	89.76	89.52	89.28	89.04	88.80	88.56	88.32	88.07	87.83	87.59
4.00	0.00	13.36	82.56	0.08	22.26	90.63	90.38	90.13	89.88	89.64	89.39	89.14	88.89	88.64	88.40	88.15	87.90	87.65	87.41
4.50	0.00	12.97	82.45	0.08	25.80	90.51	90.26	90.01	89.75	89.50	89.24	88.99	88.74	88.48	88.23	87.97	87.72	87.47	87.21
5.00	0.00	12.58	82.35	0.08	29.56	90.40	90.14	89.87	89.61	89.35	89.09	88.83	88.57	88.31	88.05	87.79	87.53	87.26	87.00
5.50	0.00	12.19	82.24	0.07	33.56	90.27	90.00	89.73	89.47	89.20	88.93	88.66	88.39	88.12	87.86	87.59	87.32	87.05	86.78
6.00	0.00	11.79	82.14	0.07	37.83	90.14	89.86	89.59	89.31	89.03	88.76	88.48	88.20	87.93	87.65	87.38	87.10	86.82	86.55
6.50	0.00	11.40	82.03	0.07	42.40	89.99	89.71	89.43	89.14	88.86	88.57	88.29	88.00	87.72	87.43	87.15	86.86	86.58	86.29
7.00	0.00	11.01	81.93	0.07	47.29	89.84	89.55	89.25	88.96	88.67	88.37	88.08	87.79	87.49	87.20	86.91	86.61	86.32	86.02
7.50	0.00	10.61	81.82	0.06	52.54	89.68	89.37	89.07	88.77	88.46	88.16	87.86	87.55	87.25	86.95	86.64	86.34	86.04	85.73
8.00	0.00	10.22	81.72	0.06	58.20	89.50	89.19	88.87	88.56	88.25	87.93	87.62	87.30	86.99	86.68	86.36	86.05	85.74	85.42
8.50	0.00	9.83	81.61	0.06	64.31	89.31	88.98	88.66	88.33	88.01	87.68	87.36	87.03	86.71	86.38	86.06	85.74	85.41	85.09
9.00	0.00	9.44	81.51	0.06	70.93	89.10	88.76	88.43	88.09	87.75	87.42	87.08	86.74	86.41	86.07	85.73	85.39	85.06	84.72
9.50	0.00	9.04	81.40	0.05	78.12	88.88	88.53	88.18	87.83	87.48	87.12	86.77	86.42	86.07	85.72	85.37	85.02	84.67	84.32
10.00	0.00	8.65	81.30	0.05	85.97	88.63	88.27	87.90	87.54	87.17	86.81	86.44	86.08	85.71	85.35	84.98	84.62	84.25	83.89
10.50	0.00	8.26	81.19	0.05	94.56	88.36	87.98	87.60	87.22	86.84	86.46	86.08	85.70	85.32	84.94	84.56	84.18	83.80	83.42
11.00	0.00	7.86	81.09	0.05	104.01	88.07	87.67	87.27	86.87	86.47	86.08	85.68	85.28	84.88	84.48	84.09	83.69	83.29	82.89
11.50	0.00	7.47	80.98	0.04	114.46	87.74	87.32	86.90	86.49	86.07	85.65	85.24	84.82	84.40	83.99	83.57	83.15	82.73	82.32
12.00	0.00	7.08	80.88	0.04	126.06	87.37	86.94	86.50	86.06	85.62	85.18	84.74	84.31	83.87	83.43	82.99	82.55	82.11	81.68
12.50	0.00	6.69	80.77	0.04	139.03	86.97	86.51	86.04	85.58	85.12	84.66	84.20	83.73	83.27	82.81	82.35	81.88	81.42	80.96
13.00	0.00	6.29	80.67	0.04	153.62	86.51	86.02	85.53	85.04	84.56	84.07	83.58	83.09	82.60	82.11	81.62	81.13	80.64	80.15
13.50	0.00	5.90	80.56	0.04	170.16	85.99	85.47	84.96	84.44	83.92	83.40	82.88	82.36	81.84	81.32	80.80	80.28	79.76	79.24
14.00	0.00	5.51	80.46	0.03	189.05	85.40	84.85	84.29	83.74	83.19	82.63	82.08	81.52	80.97	80.42	79.86	79.31	78.75	78.20
14.50	0.00	5.11	80.36	0.03	210.84	84.72	84.13	83.53	82.94	82.34	81.75	81.16	80.56	79.97	79.37	78.78	78.18	77.59	77.00
15.00	0.00	4.72	80.25	0.03	236.26	83.92	83.28	82.64	82.00	81.36	80.72	80.08	79.44	78.80	78.16	77.52	76.87	76.23	75.59

COMBUSTION EFFICIENCY TABLE FOR NUMBER 6 OIL

Properties of Number 6 Oil:

Molecular Weight: $338.0 \frac{lb}{lbm\ mole}$

Specific Heat: $0.480 \frac{BTU}{lb\ R}$

Enthalpy of Formation: $-167 \frac{BTU}{lb}$

Higher Heating Value: $18300.0 \frac{BTU}{lb}$

Dry Products of Combustion						COMBUSTION EFFICIENCY *(Efficiencies are listed by flue gas temperature less surrounding temperature, °F)*													
$\%O_2$	$\%CO$	$\%CO_2$	$\%N_2$	$\%SO_2$	% Excess Air	310	320	330	340	350	360	370	380	390	400	410	420	430	440
0.00	0.00	16.51	83.39	0.10	-0.00	88.43	88.22	88.02	87.81	87.60	87.40	87.19	86.98	86.78	86.57	86.36	86.16	85.95	85.74
0.50	0.00	16.11	83.29	0.10	2.31	88.30	88.09	87.88	87.66	87.45	87.24	87.03	86.82	86.61	86.40	86.19	85.98	85.77	85.56
1.00	0.00	15.72	83.18	0.09	4.73	88.16	87.94	87.73	87.51	87.30	87.08	86.87	86.65	86.44	86.22	86.01	85.79	85.57	85.36
1.50	0.00	15.33	83.08	0.09	7.28	88.01	87.79	87.57	87.35	87.13	86.91	86.69	86.47	86.25	86.03	85.81	85.59	85.37	85.15
2.00	0.00	14.94	82.97	0.09	9.96	87.86	87.64	87.41	87.19	86.96	86.74	86.51	86.29	86.06	85.84	85.61	85.39	85.16	84.94
2.50	0.00	14.54	82.87	0.09	12.78	87.70	87.47	87.24	87.01	86.78	86.55	86.32	86.09	85.86	85.63	85.40	85.17	84.94	84.71
3.00	0.00	14.15	82.77	0.08	15.77	87.53	87.29	87.06	86.82	86.59	86.35	86.12	85.88	85.64	85.41	85.17	84.94	84.70	84.47
3.50	0.00	13.76	82.66	0.08	18.92	87.35	87.11	86.87	86.63	86.38	86.14	85.90	85.66	85.42	85.18	84.94	84.69	84.45	84.21
4.00	0.00	13.36	82.56	0.08	22.26	87.16	86.91	86.66	86.42	86.17	85.92	85.67	85.43	85.18	84.93	84.68	84.44	84.19	83.94
4.50	0.00	12.97	82.45	0.08	25.80	86.96	86.70	86.45	86.20	85.94	85.69	85.43	85.18	84.92	84.67	84.42	84.16	83.91	83.65
5.00	0.00	12.58	82.35	0.08	29.56	86.74	86.48	86.22	85.96	85.70	85.44	85.18	84.92	84.65	84.39	84.13	83.87	83.61	83.35
5.50	0.00	12.19	82.24	0.07	33.56	86.51	86.25	85.98	85.71	85.44	85.17	84.90	84.64	84.37	84.10	83.83	83.56	83.29	83.03
6.00	0.00	11.79	82.14	0.07	37.83	86.27	85.99	85.72	85.44	85.17	84.89	84.61	84.34	84.06	83.78	83.51	83.23	82.96	82.68
6.50	0.00	11.40	82.03	0.07	42.40	86.01	85.73	85.44	85.16	84.87	84.59	84.30	84.02	83.73	83.45	83.16	82.88	82.60	82.31
7.00	0.00	11.01	81.93	0.07	47.29	85.73	85.44	85.14	84.85	84.56	84.26	83.97	83.68	83.38	83.09	82.80	82.50	82.21	81.91
7.50	0.00	10.61	81.82	0.06	52.54	85.43	85.13	84.83	84.52	84.22	83.92	83.61	83.31	83.01	82.70	82.40	82.10	81.79	81.49
8.00	0.00	10.22	81.72	0.06	58.20	85.11	84.80	84.48	84.17	83.85	83.54	83.23	82.91	82.60	82.29	81.97	81.66	81.35	81.03
8.50	0.00	9.83	81.61	0.06	64.31	84.76	84.44	84.11	83.79	83.46	83.14	82.81	82.49	82.16	81.84	81.51	81.19	80.86	80.54
9.00	0.00	9.44	81.51	0.06	70.93	84.38	84.05	83.71	83.37	83.03	82.70	82.36	82.02	81.69	81.35	81.01	80.68	80.34	80.00
9.50	0.00	9.04	81.40	0.05	78.12	83.97	83.62	83.27	82.92	82.57	82.22	81.87	81.52	81.17	80.82	80.47	80.12	79.77	79.42
10.00	0.00	8.65	81.30	0.05	85.97	83.53	83.16	82.80	82.43	82.07	81.70	81.34	80.97	80.61	80.24	79.88	79.51	79.15	78.78
10.50	0.00	8.26	81.19	0.05	94.56	83.03	82.65	82.27	81.89	81.51	81.13	80.75	80.37	79.99	79.61	79.23	78.85	78.47	78.09
11.00	0.00	7.86	81.09	0.05	104.01	82.50	82.10	81.70	81.30	80.90	80.51	80.11	79.71	79.31	78.92	78.52	78.12	77.72	77.32
11.50	0.00	7.47	80.98	0.04	114.46	81.90	81.48	81.07	80.65	80.23	79.81	79.40	78.98	78.56	78.15	77.73	77.31	76.90	76.48
12.00	0.00	7.08	80.88	0.04	126.06	81.24	80.80	80.36	79.92	79.48	79.05	78.61	78.17	77.73	77.29	76.85	76.42	75.98	75.54
12.50	0.00	6.69	80.77	0.04	139.03	80.50	80.04	79.57	79.11	78.65	78.19	77.72	77.26	76.80	76.34	75.88	75.41	74.95	74.49
13.00	0.00	6.29	80.67	0.04	153.62	79.67	79.18	78.69	78.20	77.71	77.22	76.73	76.24	75.75	75.26	74.78	74.29	73.80	73.31
13.50	0.00	5.90	80.56	0.04	170.16	78.72	78.20	77.68	77.16	76.65	76.13	75.61	75.09	74.57	74.05	73.53	73.01	72.49	71.97
14.00	0.00	5.51	80.46	0.03	189.05	77.65	77.09	76.54	75.98	75.43	74.87	74.32	73.77	73.21	72.66	72.10	71.55	71.00	70.44
14.50	0.00	5.11	80.36	0.03	210.84	76.40	75.81	75.21	74.62	74.03	73.43	72.84	72.24	71.65	71.05	70.46	69.87	69.27	68.68
15.00	0.00	4.72	80.25	0.03	236.26	74.95	74.31	73.67	73.03	72.39	71.75	71.11	70.47	69.83	69.18	68.54	67.90	67.26	66.62

COMBUSTION EFFICIENCY TABLE FOR NUMBER 6 OIL

Properties of Number 6 Oil:

Molecular Weight: $338.0 \frac{lb}{lbm\ mole}$

Specific Heat: $0.480 \frac{BTU}{lb\ R}$

Enthalpy of Formation: $-167 \frac{BTU}{lb}$

Higher Heating Value: $18300.0 \frac{BTU}{lb}$

Dry Products of Combustion						COMBUSTION EFFICIENCY *(Efficiencies are listed by flue gas temperature less surrounding temperature, °F)*													
$\%O_2$	$\%CO$	$\%CO_2$	$\%N_2$	$\%SO_2$	% Excess Air	450	460	470	480	490	500	510	520	530	540	550	560	570	580
0.00	0.00	16.61	83.39	0.10	-0.00	85.54	85.33	85.12	84.92	84.71	84.50	84.30	84.09	83.88	83.68	83.47	83.26	83.06	82.85
0.50	0.00	16.11	83.29	0.10	2.31	85.34	85.13	84.92	84.71	84.50	84.29	84.08	83.87	83.66	83.45	83.24	83.02	82.81	82.60
1.00	0.00	15.72	83.18	0.09	4.73	85.14	84.93	84.71	84.50	84.28	84.07	83.85	83.64	83.42	83.21	82.99	82.77	82.56	82.34
1.50	0.00	15.33	83.08	0.09	7.28	84.93	84.71	84.49	84.27	84.05	83.83	83.61	83.39	83.17	82.95	82.73	82.51	82.29	82.07
2.00	0.00	14.94	82.97	0.09	9.96	84.71	84.49	84.26	84.04	83.81	83.59	83.36	83.14	82.91	82.69	82.46	82.24	82.01	81.79
2.50	0.00	14.54	82.87	0.09	12.78	84.48	84.25	84.02	83.79	83.56	83.33	83.10	82.87	82.64	82.41	82.18	81.95	81.72	81.48
3.00	0.00	14.15	82.77	0.08	15.77	84.23	83.99	83.76	83.52	83.29	83.05	82.82	82.58	82.35	82.11	81.87	81.64	81.40	81.17
3.50	0.00	13.76	82.66	0.08	18.92	83.97	83.73	83.49	83.25	83.00	82.76	82.52	82.28	82.04	81.80	81.55	81.31	81.07	80.83
4.00	0.00	13.36	82.56	0.08	22.26	83.69	83.45	83.20	82.95	82.70	82.46	82.21	81.96	81.71	81.46	81.22	80.97	80.72	80.47
4.50	0.00	12.97	82.45	0.08	25.80	83.40	83.15	82.89	82.64	82.38	82.13	81.88	81.62	81.37	81.11	80.86	80.61	80.35	80.10
5.00	0.00	12.58	82.35	0.08	29.56	83.09	82.83	82.57	82.31	82.04	81.78	81.52	81.26	81.00	80.74	80.48	80.22	79.96	79.70
5.50	0.00	12.19	82.24	0.07	33.56	82.76	82.49	82.22	81.95	81.68	81.42	81.15	80.88	80.61	80.34	80.07	79.81	79.54	79.27
6.00	0.00	11.79	82.14	0.07	37.83	82.40	82.13	81.85	81.58	81.30	81.02	80.75	80.47	80.19	79.92	79.64	79.37	79.09	78.81
6.50	0.00	11.40	82.03	0.07	42.40	82.03	81.74	81.46	81.17	80.89	80.60	80.32	80.03	79.75	79.46	79.18	78.90	78.61	78.33
7.00	0.00	11.01	81.93	0.07	47.29	81.62	81.33	81.03	80.74	80.45	80.15	79.86	79.57	79.27	78.98	78.69	78.39	78.10	77.80
7.50	0.00	10.61	81.82	0.06	52.54	81.19	80.88	80.58	80.28	79.97	79.67	79.37	79.06	78.76	78.46	78.15	77.85	77.55	77.24
8.00	0.00	10.22	81.72	0.06	58.20	80.72	80.40	80.09	79.78	79.46	79.15	78.84	78.52	78.21	77.90	77.58	77.27	76.95	76.64
8.50	0.00	9.83	81.61	0.06	64.31	80.21	79.89	79.56	79.24	78.91	78.59	78.26	77.94	77.61	77.29	76.96	76.64	76.31	75.99
9.00	0.00	9.44	81.51	0.06	70.93	79.66	79.33	78.99	78.65	78.32	77.98	77.64	77.31	76.97	76.63	76.29	75.96	75.62	75.28
9.50	0.00	9.04	81.40	0.05	78.12	79.07	78.72	78.37	78.02	77.67	77.32	76.97	76.62	76.27	75.92	75.57	75.22	74.87	74.52
10.00	0.00	8.65	81.30	0.05	85.97	78.42	78.06	77.69	77.33	76.96	76.60	76.23	75.87	75.50	75.14	74.77	74.41	74.04	73.68
10.50	0.00	8.26	81.19	0.05	94.56	77.71	77.33	76.95	76.57	76.19	75.81	75.43	75.05	74.66	74.28	73.90	73.52	73.14	72.76
11.00	0.00	7.86	81.09	0.05	104.01	76.93	76.53	76.13	75.73	75.33	74.94	74.54	74.14	73.74	73.35	72.95	72.55	72.15	71.75
11.50	0.00	7.47	80.98	0.04	114.46	76.06	75.64	75.23	74.81	74.39	73.98	73.56	73.14	72.73	72.31	71.89	71.47	71.06	70.64
12.00	0.00	7.08	80.88	0.04	126.06	75.10	74.66	74.22	73.79	73.35	72.91	72.47	72.03	71.59	71.16	70.72	70.28	69.84	69.40
12.50	0.00	6.69	80.77	0.04	139.03	74.03	73.57	73.10	72.64	72.18	71.72	71.25	70.79	70.33	69.87	69.41	68.94	68.48	68.02
13.00	0.00	6.29	80.67	0.04	153.62	72.82	72.33	71.84	71.35	70.86	70.37	69.89	69.40	68.91	68.42	67.93	67.44	66.95	66.46
13.50	0.00	5.90	80.56	0.04	170.16	71.45	70.93	70.41	69.89	69.37	68.85	68.34	67.82	67.30	66.78	66.26	65.74	65.22	64.70
14.00	0.00	5.51	80.46	0.03	189.05	69.89	69.33	68.78	68.23	67.67	67.12	66.56	66.01	65.46	64.90	64.35	63.79	63.24	62.68
14.50	0.00	5.11	80.36	0.03	210.84	68.08	67.49	66.90	66.30	65.71	65.11	64.52	63.92	63.33	62.74	62.14	61.55	60.95	60.36
15.00	0.00	4.72	80.25	0.03	236.26	65.98	65.34	64.70	64.06	63.42	62.78	62.13	61.49	60.85	60.21	59.57	58.93	58.29	57.65

COMBUSTION EFFICIENCY TABLE FOR NUMBER 6 OIL

Properties of Number 6 Oil:

Molecular Weight: 338.0 $\frac{lb}{lbm\ mole}$

Specific Heat: 0.480 $\frac{BTU}{lb\ R}$

Enthalpy of Formation: -167 $\frac{BTU}{lb}$

Higher Heating Value: 18300.0 $\frac{BTU}{lb}$

Dry Products of Combustion						COMBUSTION EFFICIENCY *(Efficiencies are listed by flue gas temperature less surrounding temperature, °F)*													
$\%O_2$	$\%CO$	$\%CO_2$	$\%N_2$	$\%SO_2$	% Excess Air	590	600	610	620	630	640	650	660	670	680	690	700	710	720
0.00	0.00	16.51	83.39	0.10	-0.00	82.64	82.44	82.23	82.02	81.82	81.61	81.40	81.19	80.99	80.78	80.57	80.37	80.16	79.95
0.50	0.00	16.11	83.29	0.10	2.31	82.39	82.18	81.97	81.76	81.55	81.34	81.13	80.91	80.70	80.49	80.28	80.07	79.86	79.65
1.00	0.00	15.72	83.18	0.09	4.73	82.13	81.91	81.70	81.48	81.27	81.05	80.84	80.62	80.41	80.19	79.97	79.76	79.54	79.33
1.50	0.00	15.33	83.08	0.09	7.28	81.85	81.63	81.41	81.19	80.97	80.75	80.53	80.31	80.09	79.87	79.65	79.43	79.21	78.99
2.00	0.00	14.94	82.97	0.09	9.96	81.56	81.34	81.11	80.89	80.66	80.44	80.21	79.99	79.76	79.54	79.31	79.09	78.86	78.64
2.50	0.00	14.54	82.87	0.09	12.78	81.25	81.02	80.79	80.56	80.33	80.10	79.87	79.64	79.41	79.18	78.95	78.72	78.49	78.26
3.00	0.00	14.15	82.77	0.08	15.77	80.93	80.70	80.46	80.22	79.99	79.75	79.52	79.28	79.05	78.81	78.57	78.34	78.10	77.87
3.50	0.00	13.76	82.66	0.08	18.92	80.59	80.35	80.11	79.86	79.62	79.38	79.14	78.90	78.66	78.42	78.17	77.93	77.69	77.45
4.00	0.00	13.36	82.56	0.08	22.26	80.23	79.98	79.73	79.48	79.24	78.99	78.74	78.49	78.25	78.00	77.75	77.50	77.26	77.01
4.50	0.00	12.97	82.45	0.08	25.80	79.84	79.59	79.33	79.08	78.83	78.57	78.32	78.06	77.81	77.56	77.30	77.05	76.79	76.54
5.00	0.00	12.58	82.35	0.08	29.56	79.43	79.17	78.91	78.65	78.39	78.13	77.87	77.61	77.35	77.09	76.82	76.56	76.30	76.04
5.50	0.00	12.19	82.24	0.07	33.56	79.00	78.73	78.46	78.20	77.93	77.66	77.39	77.12	76.85	76.58	76.32	76.05	75.78	75.51
6.00	0.00	11.79	82.14	0.07	37.83	78.54	78.26	77.98	77.71	77.43	77.16	76.88	76.60	76.33	76.05	75.77	75.50	75.22	74.95
6.50	0.00	11.40	82.03	0.07	42.40	78.04	77.76	77.47	77.19	76.90	76.62	76.33	76.05	75.76	75.48	75.20	74.91	74.63	74.34
7.00	0.00	11.01	81.93	0.07	47.29	77.51	77.22	76.92	76.63	76.34	76.04	75.75	75.46	75.16	74.87	74.57	74.28	73.99	73.69
7.50	0.00	10.61	81.82	0.06	52.54	76.94	76.64	76.33	76.03	75.73	75.42	75.12	74.82	74.51	74.21	73.91	73.61	73.30	73.00
8.00	0.00	10.22	81.72	0.06	58.20	76.33	76.01	75.70	75.39	75.07	74.76	74.45	74.13	73.82	73.50	73.19	72.88	72.56	72.25
8.50	0.00	9.83	81.61	0.06	64.31	75.66	75.34	75.01	74.69	74.36	74.04	73.72	73.39	73.07	72.74	72.42	72.09	71.77	71.44
9.00	0.00	9.44	81.51	0.06	70.93	74.95	74.61	74.27	73.94	73.60	73.26	72.92	72.59	72.25	71.91	71.58	71.24	70.90	70.56
9.50	0.00	9.04	81.40	0.05	78.12	74.17	73.82	73.47	73.11	72.76	72.41	72.06	71.71	71.36	71.01	70.66	70.31	69.96	69.61
10.00	0.00	8.65	81.30	0.05	85.97	73.31	72.95	72.59	72.22	71.86	71.49	71.13	70.76	70.40	70.03	69.67	69.30	68.94	68.57
10.50	0.00	8.26	81.19	0.05	94.56	72.38	72.00	71.62	71.24	70.86	70.48	70.10	69.72	69.34	68.96	68.58	68.20	67.82	67.44
11.00	0.00	7.86	81.09	0.05	104.01	71.36	70.96	70.56	70.16	69.77	69.37	68.97	68.57	68.17	67.78	67.38	66.98	66.58	66.18
11.50	0.00	7.47	80.98	0.04	114.46	70.22	69.81	69.39	68.97	68.55	68.14	67.72	67.30	66.89	66.47	66.05	65.64	65.22	64.80
12.00	0.00	7.08	80.88	0.04	126.06	68.96	68.53	68.09	67.65	67.21	66.77	66.33	65.90	65.46	65.02	64.58	64.14	63.70	63.27
12.50	0.00	6.69	80.77	0.04	139.03	67.56	67.09	66.63	66.17	65.71	65.25	64.78	64.32	63.86	63.40	62.93	62.47	62.01	61.55
13.00	0.00	6.29	80.67	0.04	153.62	65.97	65.48	65.00	64.51	64.02	63.53	63.04	62.55	62.06	61.57	61.08	60.59	60.11	59.62
13.50	0.00	5.90	80.56	0.04	170.16	64.18	63.66	63.14	62.62	62.10	61.58	61.06	60.54	60.03	59.51	58.99	58.47	57.95	57.43
14.00	0.00	5.51	80.46	0.03	189.05	62.13	61.58	61.02	60.47	59.91	59.36	58.81	58.25	57.70	57.14	56.59	56.04	55.48	54.93
14.50	0.00	5.11	80.36	0.03	210.84	59.77	59.17	58.58	57.98	57.39	56.80	56.20	55.61	55.01	54.42	53.82	53.23	52.64	52.04
15.00	0.00	4.72	80.25	0.03	236.26	57.01	56.37	55.73	55.09	54.44	53.80	53.16	52.52	51.88	51.24	50.60	49.96	49.32	48.68

COMBUSTION EFFICIENCY TABLE FOR NUMBER 6 OIL

Properties of Number 6 Oil:

Molecular Weight: $338.0 \frac{lb}{lbm\ mole}$

Specific Heat: $0.480 \frac{BTU}{lb\ R}$

Enthalpy of Formation: $-167 \frac{BTU}{lb}$

Higher Heating Value: $18300.0 \frac{BTU}{lb}$

Dry Products of Combustion						COMBUSTION EFFICIENCY *(Efficiencies are listed by flue gas temperature less surrounding temperature, °F)*													
$\%O_2$	$\%CO$	$\%CO_2$	$\%N_2$	$\%SO_2$	% Excess Air	170	180	190	200	210	220	230	240	250	260	270	280	290	300
0.00	0.10	16.44	83.36	0.10	-0.22	91.18	90.98	90.77	90.56	90.36	90.15	89.94	89.74	89.53	89.33	89.12	88.91	88.71	88.50
0.50	0.10	16.05	83.26	0.10	2.07	91.11	90.90	90.68	90.47	90.26	90.05	89.84	89.63	89.42	89.21	89.00	88.79	88.58	88.37
1.00	0.10	15.65	83.15	0.09	4.48	91.03	90.81	90.60	90.38	90.17	89.95	89.74	89.52	89.31	89.09	88.88	88.66	88.45	88.23
1.50	0.10	15.26	83.05	0.09	7.02	90.94	90.72	90.50	90.28	90.06	89.85	89.63	89.41	89.19	88.97	88.75	88.53	88.31	88.09
2.00	0.10	14.87	82.94	0.09	9.69	90.86	90.63	90.41	90.18	89.96	89.73	89.51	89.28	89.06	88.84	88.61	88.39	88.16	87.94
2.50	0.10	14.47	82.84	0.09	12.50	90.76	90.53	90.30	90.07	89.84	89.61	89.39	89.16	88.93	88.70	88.47	88.24	88.01	87.78
3.00	0.10	14.08	82.73	0.09	15.47	90.67	90.43	90.20	89.96	89.72	89.49	89.25	89.02	88.78	88.55	88.31	88.08	87.84	87.61
3.50	0.10	13.69	82.63	0.08	18.61	90.56	90.32	90.08	89.84	89.60	89.36	89.12	88.88	88.64	88.39	88.15	87.91	87.67	87.43
4.00	0.10	13.30	82.52	0.08	21.93	90.45	90.21	89.96	89.71	89.47	89.22	88.97	88.72	88.48	88.23	87.98	87.74	87.49	87.24
4.50	0.10	12.90	82.42	0.08	25.45	90.34	90.08	89.83	89.58	89.32	89.07	88.82	88.56	88.31	88.06	87.80	87.55	87.30	87.04
5.00	0.10	12.51	82.31	0.08	29.19	90.21	89.95	89.69	89.43	89.17	88.91	88.65	88.39	88.13	87.87	87.61	87.35	87.09	86.83
5.50	0.10	12.12	82.21	0.07	33.17	90.08	89.82	89.55	89.28	89.01	88.74	88.48	88.21	87.94	87.67	87.41	87.14	86.87	86.60
6.00	0.10	11.72	82.11	0.07	37.42	89.94	89.67	89.39	89.12	88.84	88.57	88.29	88.02	87.74	87.46	87.19	86.91	86.64	86.36
6.50	0.10	11.33	82.00	0.07	41.96	89.79	89.51	89.23	88.94	88.66	88.38	88.09	87.81	87.52	87.24	86.96	86.67	86.39	86.10
7.00	0.10	10.94	81.90	0.07	46.82	89.63	89.34	89.05	88.76	88.46	88.17	87.88	87.59	87.29	87.00	86.71	86.41	86.12	85.83
7.50	0.10	10.55	81.79	0.06	52.04	89.46	89.16	88.86	88.56	88.25	87.95	87.65	87.35	87.04	86.74	86.44	86.14	85.83	85.53
8.00	0.10	10.15	81.69	0.06	57.66	89.28	88.97	88.65	88.34	88.03	87.71	87.40	87.09	86.78	86.46	86.15	85.84	85.53	85.21
8.50	0.10	9.76	81.58	0.06	63.73	89.08	88.75	88.43	88.11	87.78	87.46	87.14	86.81	86.49	86.16	85.84	85.52	85.19	84.87
9.00	0.10	9.37	81.48	0.06	70.30	88.86	88.53	88.19	87.85	87.52	87.18	86.85	86.51	86.18	85.84	85.50	85.17	84.83	84.50
9.50	0.10	8.97	81.37	0.05	77.44	88.63	88.28	87.93	87.58	87.23	86.88	86.53	86.18	85.84	85.49	85.14	84.79	84.44	84.09
10.00	0.10	8.58	81.27	0.05	85.23	88.37	88.01	87.64	87.28	86.92	86.55	86.19	85.83	85.46	85.10	84.74	84.37	84.01	83.65
10.50	0.10	8.19	81.16	0.05	93.76	88.09	87.71	87.33	86.95	86.57	86.20	85.82	85.44	85.06	84.68	84.30	83.92	83.54	83.16
11.00	0.10	7.80	81.06	0.05	103.13	87.78	87.39	86.99	86.59	86.20	85.80	85.41	85.01	84.61	84.22	83.82	83.42	83.03	82.63
11.50	0.10	7.40	80.95	0.05	113.49	87.44	87.03	86.61	86.20	85.78	85.37	84.95	84.54	84.12	83.70	83.29	82.87	82.46	82.04
12.00	0.10	7.01	80.85	0.04	124.99	87.06	86.63	86.19	85.75	85.32	84.88	84.45	84.01	83.57	83.14	82.70	82.26	81.83	81.39
12.50	0.10	6.62	80.74	0.04	137.84	86.64	86.18	85.72	85.26	84.80	84.34	83.88	83.42	82.96	82.50	82.04	81.58	81.12	80.66
13.00	0.10	6.22	80.64	0.04	152.28	86.17	85.68	85.19	84.71	84.22	83.73	83.25	82.76	82.27	81.79	81.30	80.81	80.33	79.84
13.50	0.10	5.83	80.53	0.04	168.64	85.63	85.11	84.60	84.08	83.56	83.05	82.53	82.01	81.50	80.98	80.46	79.95	79.43	78.91
14.00	0.10	5.44	80.43	0.03	187.32	85.01	84.46	83.91	83.36	82.81	82.26	81.71	81.16	80.61	80.06	79.51	78.95	78.40	77.85
14.50	0.10	5.04	80.32	0.03	208.85	84.31	83.72	83.13	82.53	81.94	81.35	80.76	80.17	79.58	78.99	78.40	77.81	77.22	76.63
15.00	0.10	4.65	80.22	0.03	233.94	83.46	82.84	82.21	81.57	80.93	80.30	79.66	79.03	78.39	77.75	77.12	76.48	75.84	75.21

COMBUSTION EFFICIENCY TABLE FOR NUMBER 6 OIL

Properties of Number 6 Oil:

Molecular Weight: 338.0 $\frac{lb}{lbm\ mole}$

Specific Heat: 0.480 $\frac{BTU}{lb\ R}$

Enthalpy of Formation: -167 $\frac{BTU}{lb}$

Higher Heating Value: 18300.0 $\frac{BTU}{lb}$

Dry Products of Combustion						COMBUSTION EFFICIENCY *(Efficiencies are listed by flue gas temperature less surrounding temperature, °F)*													
$\%O_2$	$\%CO$	$\%CO_2$	$\%N_2$	$\%SO_2$	% Excess Air	310	320	330	340	350	360	370	380	390	400	410	420	430	440
0.00	0.10	16.44	83.36	0.10	-0.22	88.29	88.09	87.88	87.67	87.47	87.26	87.06	86.85	86.64	86.44	86.23	86.02	85.82	85.61
0.50	0.10	16.05	83.26	0.10	2.07	88.16	87.95	87.74	87.53	87.32	87.11	86.90	86.69	86.48	86.26	86.05	85.84	85.63	85.42
1.00	0.10	15.65	83.15	0.09	4.48	88.02	87.80	87.59	87.37	87.16	86.94	86.73	86.51	86.30	86.08	85.87	85.65	85.44	85.22
1.50	0.10	15.26	83.05	0.09	7.02	87.87	87.65	87.43	87.21	86.99	86.77	86.55	86.33	86.11	85.89	85.67	85.45	85.23	85.01
2.00	0.10	14.87	82.94	0.09	9.69	87.71	87.49	87.26	87.04	86.81	86.59	86.37	86.14	85.92	85.69	85.47	85.24	85.02	84.79
2.50	0.10	14.47	82.84	0.09	12.50	87.55	87.32	87.09	86.86	86.63	86.40	86.17	85.94	85.71	85.48	85.25	85.02	84.79	84.56
3.00	0.10	14.08	82.73	0.09	15.47	87.37	87.14	86.90	86.67	86.43	86.20	85.96	85.73	85.49	85.26	85.02	84.79	84.55	84.32
3.50	0.10	13.69	82.63	0.08	18.61	87.19	86.95	86.71	86.47	86.23	85.99	85.74	85.50	85.26	85.02	84.78	84.54	84.30	84.06
4.00	0.10	13.30	82.52	0.08	21.93	87.00	86.75	86.50	86.25	86.01	85.76	85.51	85.27	85.02	84.77	84.53	84.28	84.03	83.78
4.50	0.10	12.90	82.42	0.08	25.45	86.79	86.54	86.28	86.03	85.78	85.52	85.27	85.01	84.76	84.51	84.25	84.00	83.75	83.49
5.00	0.10	12.51	82.31	0.08	29.19	86.57	86.31	86.05	85.79	85.53	85.27	85.01	84.75	84.49	84.23	83.97	83.71	83.45	83.19
5.50	0.10	12.12	82.21	0.07	33.17	86.34	86.07	85.80	85.53	85.27	85.00	84.73	84.46	84.19	83.93	83.66	83.39	83.12	82.86
6.00	0.10	11.72	82.11	0.07	37.42	86.09	85.81	85.54	85.26	84.99	84.71	84.43	84.16	83.88	83.61	83.33	83.06	82.78	82.51
6.50	0.10	11.33	82.00	0.07	41.96	85.82	85.54	85.25	84.97	84.69	84.40	84.12	83.83	83.55	83.27	82.98	82.70	82.42	82.13
7.00	0.10	10.94	81.90	0.07	46.82	85.54	85.24	84.95	84.66	84.37	84.07	83.78	83.49	83.19	82.90	82.61	82.32	82.02	81.73
7.50	0.10	10.55	81.79	0.06	52.04	85.23	84.93	84.63	84.32	84.02	83.72	83.42	83.11	82.81	82.51	82.21	81.90	81.60	81.30
8.00	0.10	10.15	81.69	0.06	57.66	84.90	84.59	84.28	83.96	83.65	83.34	83.02	82.71	82.40	82.09	81.77	81.46	81.15	80.84
8.50	0.10	9.76	81.58	0.06	63.73	84.55	84.22	83.90	83.57	83.25	82.93	82.60	82.28	81.95	81.63	81.31	80.98	80.66	80.34
9.00	0.10	9.37	81.48	0.06	70.30	84.16	83.82	83.49	83.15	82.82	82.48	82.14	81.81	81.47	81.14	80.80	80.47	80.13	79.79
9.50	0.10	8.97	81.37	0.05	77.44	83.74	83.39	83.04	82.69	82.35	82.00	81.65	81.30	80.95	80.60	80.25	79.90	79.55	79.20
10.00	0.10	8.58	81.27	0.05	85.23	83.28	82.92	82.56	82.19	81.83	81.47	81.10	80.74	80.38	80.02	79.65	79.29	78.93	78.56
10.50	0.10	8.19	81.16	0.05	93.76	82.79	82.41	82.03	81.65	81.27	80.89	80.51	80.13	79.75	79.37	79.00	78.62	78.24	77.86
11.00	0.10	7.80	81.06	0.05	103.13	82.24	81.84	81.44	81.05	80.65	80.25	79.86	79.46	79.07	78.67	78.27	77.88	77.48	77.08
11.50	0.10	7.40	80.95	0.05	113.49	81.63	81.21	80.80	80.38	79.97	79.55	79.14	78.72	78.31	77.89	77.48	77.06	76.65	76.23
12.00	0.10	7.01	80.85	0.04	124.99	80.95	80.52	80.08	79.65	79.21	78.77	78.34	77.90	77.46	77.03	76.59	76.15	75.72	75.28
12.50	0.10	6.62	80.74	0.04	137.84	80.20	79.74	79.28	78.82	78.36	77.90	77.44	76.98	76.52	76.06	75.60	75.14	74.68	74.22
13.00	0.10	6.22	80.64	0.04	152.28	79.35	78.87	78.38	77.90	77.41	76.92	76.44	75.95	75.46	74.98	74.49	74.00	73.52	73.03
13.50	0.10	5.83	80.53	0.04	168.64	78.40	77.88	77.36	76.85	76.33	75.81	75.30	74.78	74.26	73.75	73.23	72.71	72.20	71.68
14.00	0.10	5.44	80.43	0.03	187.32	77.30	76.75	76.20	75.65	75.10	74.55	74.00	73.45	72.89	72.34	71.79	71.24	70.69	70.14
14.50	0.10	5.04	80.32	0.03	208.85	76.04	75.45	74.86	74.27	73.68	73.09	72.50	71.91	71.32	70.73	70.13	69.54	68.95	68.36
15.00	0.10	4.65	80.22	0.03	233.94	74.57	73.93	73.30	72.66	72.02	71.39	70.75	70.11	69.48	68.84	68.20	67.57	66.93	66.29

COMBUSTION EFFICIENCY TABLE FOR NUMBER 6 OIL

Properties of Number 6 Oil:

Molecular Weight: 338.0 $\frac{lb}{lbm\ mole}$

Specific Heat: 0.480 $\frac{BTU}{lb\ R}$

Enthalpy of Formation: -167 $\frac{BTU}{lb}$

Higher Heating Value: 18300.0 $\frac{BTU}{lb}$

Dry Products of Combustion						COMBUSTION EFFICIENCY *(Efficiencies are listed by flue gas temperature less surrounding temperature, °F)*													
$\%O_2$	$\%CO$	$\%CO_2$	$\%N_2$	$\%SO_2$	% Excess Air	450	460	470	480	490	500	510	520	530	540	550	560	570	580
0.00	0.10	16.44	83.36	0.10	-0.22	85.41	85.20	84.99	84.79	84.58	84.37	84.17	83.96	83.76	83.55	83.34	83.14	82.93	82.72
0.50	0.10	16.05	83.26	0.10	2.07	85.21	85.00	84.79	84.58	84.37	84.16	83.95	83.74	83.53	83.32	83.11	82.90	82.69	82.48
1.00	0.10	15.65	83.15	0.09	4.48	85.01	84.79	84.58	84.36	84.15	83.93	83.72	83.50	83.29	83.07	82.86	82.64	82.43	82.21
1.50	0.10	15.26	83.05	0.09	7.02	84.79	84.58	84.36	84.14	83.92	83.70	83.48	83.26	83.04	82.82	82.60	82.38	82.16	81.94
2.00	0.10	14.87	82.94	0.09	9.69	84.57	84.35	84.12	83.90	83.67	83.45	83.22	83.00	82.77	82.55	82.32	82.10	81.88	81.65
2.50	0.10	14.47	82.84	0.09	12.50	84.33	84.10	83.87	83.64	83.41	83.18	82.95	82.72	82.50	82.27	82.04	81.81	81.58	81.35
3.00	0.10	14.08	82.73	0.09	15.47	84.08	83.85	83.61	83.38	83.14	82.91	82.67	82.44	82.20	81.97	81.73	81.50	81.26	81.03
3.50	0.10	13.69	82.63	0.08	18.61	83.82	83.58	83.34	83.10	82.85	82.61	82.37	82.13	81.89	81.65	81.41	81.17	80.93	80.69
4.00	0.10	13.30	82.52	0.08	21.93	83.54	83.29	83.04	82.80	82.55	82.30	82.06	81.81	81.56	81.31	81.07	80.82	80.57	80.33
4.50	0.10	12.90	82.42	0.08	25.45	83.24	82.99	82.73	82.48	82.23	81.97	81.72	81.47	81.21	80.96	80.71	80.45	80.20	79.95
5.00	0.10	12.51	82.31	0.08	29.19	82.92	82.66	82.40	82.14	81.88	81.62	81.36	81.10	80.84	80.58	80.32	80.06	79.80	79.54
5.50	0.10	12.12	82.21	0.07	33.17	82.59	82.32	82.05	81.79	81.52	81.25	80.98	80.72	80.45	80.18	79.91	79.64	79.38	79.11
6.00	0.10	11.72	82.11	0.07	37.42	82.23	81.96	81.68	81.40	81.13	80.85	80.58	80.30	80.03	79.75	79.48	79.20	78.93	78.65
6.50	0.10	11.33	82.00	0.07	41.96	81.85	81.56	81.28	81.00	80.71	80.43	80.15	79.86	79.58	79.29	79.01	78.73	78.44	78.16
7.00	0.10	10.94	81.90	0.07	46.82	81.44	81.15	80.85	80.56	80.27	79.97	79.68	79.39	79.10	78.80	78.51	78.22	77.93	77.63
7.50	0.10	10.55	81.79	0.06	52.04	81.00	80.70	80.39	80.09	79.79	79.49	79.18	78.88	78.58	78.28	77.97	77.67	77.37	77.07
8.00	0.10	10.15	81.69	0.06	57.66	80.52	80.21	79.90	79.59	79.27	78.96	78.65	78.34	78.02	77.71	77.40	77.08	76.77	76.46
8.50	0.10	9.76	81.58	0.06	63.73	80.01	79.69	79.36	79.04	78.72	78.39	78.07	77.75	77.42	77.10	76.77	76.45	76.13	75.80
9.00	0.10	9.37	81.48	0.06	70.30	79.46	79.12	78.79	78.45	78.11	77.78	77.44	77.11	76.77	76.43	76.10	75.76	75.43	75.09
9.50	0.10	8.97	81.37	0.05	77.44	78.86	78.51	78.16	77.81	77.46	77.11	76.76	76.41	76.06	75.71	75.37	75.02	74.67	74.32
10.00	0.10	8.58	81.27	0.05	85.23	78.20	77.84	77.47	77.11	76.75	76.38	76.02	75.66	75.29	74.93	74.57	74.20	73.84	73.48
10.50	0.10	8.19	81.16	0.05	93.76	77.48	77.10	76.72	76.34	75.96	75.58	75.21	74.83	74.45	74.07	73.69	73.31	72.93	72.55
11.00	0.10	7.80	81.06	0.05	103.13	76.69	76.29	75.90	75.50	75.10	74.71	74.31	73.92	73.52	73.12	72.73	72.33	71.93	71.54
11.50	0.10	7.40	80.95	0.05	113.49	75.82	75.40	74.98	74.57	74.15	73.74	73.32	72.91	72.49	72.08	71.66	71.25	70.83	70.42
12.00	0.10	7.01	80.85	0.04	124.99	74.85	74.41	73.97	73.54	73.10	72.66	72.23	71.79	71.35	70.92	70.48	70.04	69.61	69.17
12.50	0.10	6.62	80.74	0.04	137.84	73.76	73.30	72.84	72.38	71.92	71.46	71.00	70.54	70.08	69.62	69.16	68.70	68.24	67.78
13.00	0.10	6.22	80.64	0.04	152.28	72.54	72.06	71.57	71.08	70.60	70.11	69.62	69.14	68.65	68.16	67.68	67.19	66.71	66.22
13.50	0.10	5.83	80.53	0.04	168.64	71.16	70.65	70.13	69.61	69.10	68.58	68.06	67.55	67.03	66.51	66.00	65.48	64.96	64.45
14.00	0.10	5.44	80.43	0.03	187.32	69.59	69.04	68.49	67.94	67.39	66.83	66.28	65.73	65.18	64.63	64.08	63.53	62.98	62.43
14.50	0.10	5.04	80.32	0.03	208.85	67.77	67.18	66.59	66.00	65.41	64.82	64.23	63.64	63.05	62.46	61.87	61.28	60.69	60.10
15.00	0.10	4.65	80.22	0.03	233.94	65.66	65.02	64.38	63.75	63.11	62.47	61.84	61.20	60.56	59.93	59.29	58.65	58.02	57.38

COMBUSTION EFFICIENCY TABLE FOR NUMBER 6 OIL

Properties of Number 6 Oil:

Molecular Weight: 338.0 $\frac{\text{lb}}{\text{lbm mole}}$

Specific Heat: 0.480 $\frac{\text{BTU}}{\text{lb R}}$

Enthalpy of Formation: -167 $\frac{\text{BTU}}{\text{lb}}$

Higher Heating Value: 18300.0 $\frac{\text{BTU}}{\text{lb}}$

Dry Products of Combustion						COMBUSTION EFFICIENCY *(Efficiencies are listed by flue gas temperature less surrounding temperature, °F)*													
$\%O_2$	$\%CO$	$\%CO_2$	$\%N_2$	$\%SO_2$	% Excess Air	590	600	610	620	630	640	650	660	670	680	690	700	710	720
0.00	0.10	16.44	83.36	0.10	-0.22	82.52	82.31	82.11	81.90	81.69	81.49	81.28	81.07	80.87	80.66	80.46	80.25	80.04	79.84
0.50	0.10	16.05	83.26	0.10	2.07	82.27	82.05	81.84	81.63	81.42	81.21	81.00	80.79	80.58	80.37	80.16	79.95	79.74	79.53
1.00	0.10	15.65	83.15	0.09	4.48	82.00	81.78	81.57	81.35	81.14	80.93	80.71	80.50	80.28	80.07	79.85	79.64	79.42	79.21
1.50	0.10	15.26	83.05	0.09	7.02	81.72	81.50	81.28	81.06	80.84	80.62	80.40	80.18	79.96	79.74	79.52	79.31	79.09	78.87
2.00	0.10	14.87	82.94	0.09	9.69	81.43	81.20	80.98	80.75	80.53	80.30	80.08	79.86	79.63	79.41	79.18	78.96	78.73	78.51
2.50	0.10	14.47	82.84	0.09	12.50	81.12	80.89	80.66	80.43	80.20	79.97	79.74	79.51	79.28	79.05	78.82	78.59	78.36	78.13
3.00	0.10	14.08	82.73	0.09	15.47	80.79	80.56	80.32	80.09	79.85	79.62	79.38	79.14	78.91	78.67	78.44	78.20	77.97	77.73
3.50	0.10	13.69	82.63	0.08	18.61	80.45	80.20	79.96	79.72	79.48	79.24	79.00	78.76	78.52	78.28	78.04	77.80	77.55	77.31
4.00	0.10	13.30	82.52	0.08	21.93	80.08	79.83	79.59	79.34	79.09	78.84	78.60	78.35	78.10	77.86	77.61	77.36	77.12	76.87
4.50	0.10	12.90	82.42	0.08	25.45	79.69	79.44	79.19	78.93	78.68	78.42	78.17	77.92	77.66	77.41	77.16	76.90	76.65	76.40
5.00	0.10	12.51	82.31	0.08	29.19	79.28	79.02	78.76	78.50	78.24	77.98	77.72	77.46	77.20	76.94	76.68	76.42	76.16	75.90
5.50	0.10	12.12	82.21	0.07	33.17	78.84	78.57	78.31	78.04	77.77	77.50	77.24	76.97	76.70	76.43	76.17	75.90	75.63	75.36
6.00	0.10	11.72	82.11	0.07	37.42	78.37	78.10	77.82	77.55	77.27	77.00	76.72	76.45	76.17	75.90	75.62	75.34	75.07	74.79
6.50	0.10	11.33	82.00	0.07	41.96	77.88	77.59	77.31	77.02	76.74	76.46	76.17	75.89	75.60	75.32	75.04	74.75	74.47	74.19
7.00	0.10	10.94	81.90	0.07	46.82	77.34	77.05	76.75	76.46	76.17	75.88	75.58	75.29	75.00	74.71	74.41	74.12	73.83	73.53
7.50	0.10	10.55	81.79	0.06	52.04	76.77	76.46	76.16	75.86	75.56	75.25	74.95	74.65	74.35	74.04	73.74	73.44	73.14	72.84
8.00	0.10	10.15	81.69	0.06	57.66	76.15	75.83	75.52	75.21	74.90	74.58	74.27	73.96	73.65	73.33	73.02	72.71	72.39	72.08
8.50	0.10	9.76	81.58	0.06	63.73	75.48	75.15	74.83	74.51	74.18	73.86	73.54	73.21	72.89	72.56	72.24	71.92	71.59	71.27
9.00	0.10	9.37	81.48	0.06	70.30	74.76	74.42	74.08	73.75	73.41	73.08	72.74	72.40	72.07	71.73	71.40	71.06	70.72	70.39
9.50	0.10	8.97	81.37	0.05	77.44	73.97	73.62	73.27	72.92	72.57	72.22	71.88	71.53	71.18	70.83	70.48	70.13	69.78	69.43
10.00	0.10	8.58	81.27	0.05	85.23	73.11	72.75	72.39	72.02	71.66	71.30	70.93	70.57	70.21	69.84	69.48	69.12	68.75	68.39
10.50	0.10	8.19	81.16	0.05	93.76	72.17	71.79	71.42	71.04	70.66	70.28	69.90	69.52	69.14	68.76	68.38	68.00	67.63	67.25
11.00	0.10	7.80	81.06	0.05	103.13	71.14	70.75	70.35	69.95	69.56	69.16	68.76	68.37	67.97	67.58	67.18	66.78	66.39	65.99
11.50	0.10	7.40	80.95	0.05	113.49	70.00	69.59	69.17	68.76	68.34	67.93	67.51	67.09	66.68	66.26	65.85	65.43	65.02	64.60
12.00	0.10	7.01	80.85	0.04	124.99	68.74	68.30	67.86	67.43	66.99	66.55	66.12	65.68	65.24	64.81	64.37	63.94	63.50	63.06
12.50	0.10	6.62	80.74	0.04	137.84	67.32	66.86	66.40	65.94	65.48	65.02	64.56	64.10	63.64	63.18	62.72	62.26	61.80	61.34
13.00	0.10	6.22	80.64	0.04	152.28	65.73	65.25	64.76	64.27	63.79	63.30	62.81	62.33	61.84	61.35	60.87	60.38	59.89	59.41
13.50	0.10	5.83	80.53	0.04	168.64	63.93	63.42	62.90	62.38	61.87	61.35	60.83	60.32	59.80	59.28	58.77	58.25	57.73	57.22
14.00	0.10	5.44	80.43	0.03	187.32	61.88	61.32	60.77	60.22	59.67	59.12	58.57	58.02	57.47	56.92	56.37	55.82	55.26	54.71
14.50	0.10	5.04	80.32	0.03	208.85	59.51	58.92	58.33	57.73	57.14	56.55	55.96	55.37	54.78	54.19	53.60	53.01	52.42	51.83
15.00	0.10	4.65	80.22	0.03	233.94	56.74	56.11	55.47	54.83	54.20	53.56	52.92	52.29	51.65	51.02	50.38	49.74	49.11	48.47

COMBUSTION EFFICIENCY TABLE FOR NUMBER 6 OIL

Properties of Number 6 Oil:

Molecular Weight: 338.0 $\frac{lb}{lbm\ mole}$

Specific Heat: 0.480 $\frac{BTU}{lb\,R}$

Enthalpy of Formation: -167 $\frac{BTU}{lb}$

Higher Heating Value: 18300.0 $\frac{BTU}{lb}$

Dry Products of Combustion						COMBUSTION EFFICIENCY *(Efficiencies are listed by flue gas temperature less surrounding temperature, °F)*													
$\%O_2$	$\%CO$	$\%CO_2$	$\%N_2$	$\%SO_2$	% Excess Air	170	180	190	200	210	220	230	240	250	260	270	280	290	300
0.00	0.50	16.16	83.24	0.10	-1.12	90.62	90.42	90.21	90.01	89.80	89.60	89.39	89.19	88.99	88.78	88.58	88.37	88.17	87.96
0.50	0.50	15.77	83.13	0.10	1.14	90.53	90.33	90.12	89.91	89.70	89.49	89.28	89.07	88.86	88.65	88.45	88.24	88.03	87.82
1.00	0.50	15.38	83.03	0.10	3.51	90.44	90.23	90.01	89.80	89.59	89.38	89.16	88.95	88.74	88.52	88.31	88.10	87.88	87.67
1.50	0.50	14.98	82.92	0.09	6.00	90.34	90.13	89.91	89.69	89.47	89.25	89.04	88.82	88.60	88.38	88.17	87.95	87.73	87.51
2.00	0.50	14.59	82.82	0.09	8.62	90.24	90.02	89.80	89.57	89.35	89.13	88.91	88.68	88.46	88.24	88.02	87.79	87.57	87.35
2.50	0.50	14.20	82.71	0.09	11.38	90.13	89.91	89.68	89.45	89.22	88.99	88.77	88.54	88.31	88.08	87.86	87.63	87.40	87.17
3.00	0.50	13.81	82.61	0.09	14.29	90.02	89.79	89.55	89.32	89.09	88.85	88.62	88.39	88.16	87.92	87.69	87.46	87.22	86.99
3.50	0.50	13.41	82.50	0.08	17.37	89.90	89.66	89.42	89.18	88.94	88.71	88.47	88.23	87.99	87.75	87.51	87.27	87.03	86.80
4.00	0.50	13.02	82.40	0.08	20.63	89.77	89.53	89.28	89.04	88.79	88.55	88.30	88.06	87.81	87.57	87.32	87.08	86.84	86.59
4.50	0.50	12.63	82.29	0.08	24.08	89.64	89.38	89.13	88.88	88.63	88.38	88.13	87.88	87.63	87.38	87.13	86.88	86.62	86.37
5.00	0.50	12.23	82.19	0.08	27.74	89.49	89.23	88.98	88.72	88.46	88.20	87.95	87.69	87.43	87.17	86.92	86.66	86.40	86.14
5.50	0.50	11.84	82.09	0.07	31.63	89.34	89.07	88.81	88.54	88.28	88.02	87.75	87.49	87.22	86.96	86.69	86.43	86.16	85.90
6.00	0.50	11.45	81.98	0.07	35.79	89.18	88.90	88.63	88.36	88.09	87.81	87.54	87.27	87.00	86.72	86.45	86.18	85.91	85.63
6.50	0.50	11.06	81.88	0.07	40.22	89.00	88.72	88.44	88.16	87.88	87.60	87.32	87.04	86.76	86.48	86.20	85.92	85.64	85.36
7.00	0.50	10.66	81.77	0.07	44.97	88.82	88.53	88.24	87.95	87.66	87.37	87.08	86.79	86.50	86.21	85.92	85.63	85.35	85.06
7.50	0.50	10.27	81.67	0.06	50.06	88.62	88.32	88.02	87.72	87.42	87.12	86.83	86.53	86.23	85.93	85.63	85.33	85.03	84.73
8.00	0.50	9.88	81.56	0.06	55.54	88.40	88.09	87.79	87.48	87.17	86.86	86.55	86.24	85.93	85.62	85.32	85.01	84.70	84.39
8.50	0.50	9.48	81.46	0.06	61.45	88.17	87.85	87.53	87.21	86.89	86.57	86.25	85.93	85.61	85.29	84.98	84.66	84.34	84.02
9.00	0.50	9.09	81.35	0.06	67.84	87.92	87.59	87.26	86.93	86.60	86.26	85.93	85.60	85.27	84.94	84.61	84.28	83.94	83.61
9.50	0.50	8.70	81.25	0.06	74.78	87.65	87.30	86.96	86.62	86.27	85.93	85.58	85.24	84.90	84.55	84.21	83.86	83.52	83.18
10.00	0.50	8.30	81.14	0.05	82.34	87.35	86.99	86.64	86.28	85.92	85.56	85.20	84.85	84.49	84.13	83.77	83.41	83.06	82.70
10.50	0.50	7.91	81.04	0.05	90.61	87.03	86.66	86.28	85.91	85.54	85.16	84.79	84.42	84.04	83.67	83.30	82.92	82.55	82.18
11.00	0.50	7.52	80.93	0.05	99.68	86.67	86.28	85.89	85.50	85.11	84.72	84.33	83.94	83.55	83.16	82.77	82.38	82.00	81.61
11.50	0.50	7.13	80.83	0.05	109.69	86.28	85.87	85.46	85.06	84.65	84.24	83.83	83.42	83.02	82.61	82.20	81.79	81.38	80.97
12.00	0.50	6.73	80.72	0.04	120.79	85.85	85.42	84.99	84.56	84.13	83.70	83.27	82.85	82.42	81.99	81.56	81.13	80.70	80.27
12.50	0.50	6.34	80.62	0.04	133.16	85.36	84.91	84.46	84.01	83.56	83.10	82.65	82.20	81.75	81.30	80.85	80.40	79.95	79.49
13.00	0.50	5.95	80.51	0.04	147.04	84.82	84.34	83.86	83.39	82.91	82.43	81.96	81.48	81.00	80.53	80.05	79.57	79.10	78.62
13.50	0.50	5.55	80.41	0.04	162.73	84.20	83.70	83.19	82.69	82.18	81.68	81.17	80.66	80.16	79.65	79.15	78.64	78.14	77.63
14.00	0.50	5.16	80.30	0.03	180.58	83.50	82.97	82.43	81.89	81.35	80.81	80.27	79.73	79.20	78.66	78.12	77.58	77.04	76.50
14.50	0.50	4.77	80.20	0.03	201.10	82.70	82.12	81.55	80.97	80.40	79.82	79.24	78.67	78.09	77.51	76.94	76.36	75.79	75.21
15.00	0.50	4.38	80.09	0.03	224.93	81.77	81.15	80.53	79.91	79.29	78.67	78.05	77.43	76.81	76.19	75.57	74.95	74.33	73.71

COMBUSTION EFFICIENCY TABLE FOR NUMBER 6 OIL

Properties of Number 6 Oil:

Molecular Weight: 338.0 $\frac{lb}{lbm\ mole}$

Specific Heat: 0.480 $\frac{BTU}{lb\ R}$

Enthalpy of Formation: -167 $\frac{BTU}{lb}$

Higher Heating Value: 18300.0 $\frac{BTU}{lb}$

Dry Products of Combustion						COMBUSTION EFFICIENCY *(Efficiencies are listed by flue gas temperature less surrounding temperature, °F)*													
$\%O_2$	$\%CO$	$\%CO_2$	$\%N_2$	$\%SO_2$	% Excess Air	310	320	330	340	350	360	370	380	390	400	410	420	430	440
0.00	0.50	16.16	83.24	0.10	-1.12	87.76	87.55	87.35	87.14	86.94	86.73	86.53	86.33	86.12	85.92	85.71	85.51	85.30	85.10
0.50	0.50	15.77	83.13	0.10	1.14	87.61	87.40	87.19	86.98	86.78	86.57	86.36	86.15	85.94	85.73	85.52	85.31	85.11	84.90
1.00	0.50	15.38	83.03	0.10	3.51	87.46	87.24	87.03	86.82	86.60	86.39	86.18	85.97	85.75	85.54	85.33	85.11	84.90	84.69
1.50	0.50	14.98	82.92	0.09	6.00	87.30	87.08	86.86	86.64	86.42	86.21	85.99	85.77	85.55	85.34	85.12	84.90	84.68	84.47
2.00	0.50	14.59	82.82	0.09	8.62	87.13	86.90	86.68	86.46	86.24	86.01	85.79	85.57	85.35	85.12	84.90	84.68	84.46	84.23
2.50	0.50	14.20	82.71	0.09	11.38	86.95	86.72	86.49	86.26	86.04	85.81	85.58	85.35	85.13	84.90	84.67	84.44	84.22	83.99
3.00	0.50	13.81	82.61	0.09	14.29	86.76	86.52	86.29	86.06	85.83	85.59	85.36	85.13	84.89	84.66	84.43	84.19	83.96	83.73
3.50	0.50	13.41	82.50	0.08	17.37	86.56	86.32	86.08	85.84	85.60	85.36	85.13	84.89	84.65	84.41	84.17	83.93	83.69	83.46
4.00	0.50	13.02	82.40	0.08	20.63	86.35	86.10	85.86	85.61	85.37	85.12	84.88	84.63	84.39	84.15	83.90	83.66	83.41	83.17
4.50	0.50	12.63	82.29	0.08	24.08	86.12	85.87	85.62	85.37	85.12	84.87	84.62	84.37	84.12	83.86	83.61	83.36	83.11	82.86
5.00	0.50	12.23	82.19	0.08	27.74	85.88	85.63	85.37	85.11	84.85	84.60	84.34	84.08	83.82	83.57	83.31	83.05	82.79	82.54
5.50	0.50	11.84	82.09	0.07	31.63	85.63	85.37	85.10	84.84	84.57	84.31	84.04	83.78	83.51	83.25	82.98	82.72	82.45	82.19
6.00	0.50	11.45	81.98	0.07	35.79	85.36	85.09	84.82	84.55	84.27	84.00	83.73	83.46	83.18	82.91	82.64	82.37	82.09	81.82
6.50	0.50	11.06	81.88	0.07	40.22	85.07	84.79	84.51	84.23	83.95	83.67	83.39	83.11	82.83	82.55	82.27	81.99	81.71	81.43
7.00	0.50	10.66	81.77	0.07	44.97	84.77	84.48	84.19	83.90	83.61	83.32	83.03	82.74	82.45	82.16	81.87	81.58	81.29	81.01
7.50	0.50	10.27	81.67	0.06	50.06	84.44	84.14	83.84	83.54	83.24	82.94	82.64	82.35	82.05	81.75	81.45	81.15	80.85	80.55
8.00	0.50	9.88	81.56	0.06	55.54	84.08	83.77	83.46	83.15	82.85	82.54	82.23	81.92	81.61	81.30	80.99	80.68	80.38	80.07
8.50	0.50	9.48	81.46	0.06	61.45	83.70	83.38	83.06	82.74	82.42	82.10	81.78	81.46	81.14	80.82	80.50	80.18	79.86	79.54
9.00	0.50	9.09	81.35	0.06	67.84	83.28	82.95	82.62	82.29	81.96	81.63	81.29	80.96	80.63	80.30	79.97	79.64	79.31	78.97
9.50	0.50	8.70	81.25	0.06	74.78	82.83	82.49	82.14	81.80	81.46	81.11	80.77	80.42	80.08	79.73	79.39	79.05	78.70	78.36
10.00	0.50	8.30	81.14	0.05	82.34	82.34	81.98	81.62	81.27	80.91	80.55	80.19	79.83	79.48	79.12	78.76	78.40	78.04	77.69
10.50	0.50	7.91	81.04	0.05	90.61	81.80	81.43	81.06	80.68	80.31	79.94	79.57	79.19	78.82	78.45	78.07	77.70	77.33	76.95
11.00	0.50	7.52	80.93	0.05	99.68	81.22	80.83	80.44	80.05	79.66	79.27	78.88	78.49	78.10	77.71	77.32	76.93	76.54	76.15
11.50	0.50	7.13	80.83	0.05	109.69	80.57	80.16	79.75	79.34	78.93	78.52	78.12	77.71	77.30	76.89	76.48	76.07	75.67	75.26
12.00	0.50	6.73	80.72	0.04	120.79	79.85	79.42	78.99	78.56	78.13	77.70	77.27	76.84	76.42	75.99	75.56	75.13	74.70	74.27
12.50	0.50	6.34	80.62	0.04	133.16	79.04	78.59	78.14	77.69	77.24	76.79	76.33	75.88	75.43	74.98	74.53	74.08	73.63	73.17
13.00	0.50	5.95	80.51	0.04	147.04	78.14	77.66	77.19	76.71	76.23	75.76	75.28	74.80	74.33	73.85	73.37	72.90	72.42	71.94
13.50	0.50	5.55	80.41	0.04	162.73	77.12	76.62	76.11	75.61	75.10	74.60	74.09	73.58	73.08	72.57	72.07	71.56	71.05	70.55
14.00	0.50	5.16	80.30	0.03	180.58	75.96	75.43	74.89	74.35	73.81	73.27	72.73	72.19	71.66	71.12	70.58	70.04	69.50	68.96
14.50	0.50	4.77	80.20	0.03	201.10	74.63	74.06	73.48	72.90	72.33	71.75	71.18	70.60	70.02	69.45	68.87	68.29	67.72	67.14
15.00	0.50	4.38	80.09	0.03	224.93	73.09	72.47	71.85	71.23	70.61	69.99	69.37	68.75	68.13	67.51	66.89	66.27	65.65	65.03

COMBUSTION EFFICIENCY TABLE FOR NUMBER 6 OIL

Properties of Number 6 Oil:

Molecular Weight: $338.0 \frac{lb}{lbm\ mole}$

Specific Heat: $0.480 \frac{BTU}{lb\ R}$

Enthalpy of Formation: $-167 \frac{BTU}{lb}$

Higher Heating Value: $18300.0 \frac{BTU}{lb}$

Dry Products of Combustion						COMBUSTION EFFICIENCY *(Efficiencies are listed by flue gas temperature less surrounding temperature, °F)*													
$\%O_2$	$\%CO$	$\%CO_2$	$\%N_2$	$\%SO_2$	% Excess Air	450	460	470	480	490	500	510	520	530	540	550	560	570	580
0.00	0.50	16.16	83.24	0.10	-1.12	84.89	84.69	84.48	84.28	84.07	83.87	83.66	83.46	83.26	83.05	82.85	82.64	82.44	82.23
0.50	0.50	15.77	83.13	0.10	1.14	84.69	84.48	84.27	84.06	83.85	83.64	83.44	83.23	83.02	82.81	82.60	82.39	82.18	81.97
1.00	0.50	15.38	83.03	0.10	3.51	84.47	84.26	84.05	83.83	83.62	83.41	83.19	82.98	82.77	82.55	82.34	82.13	81.92	81.70
1.50	0.50	14.98	82.92	0.09	6.00	84.25	84.03	83.81	83.59	83.38	83.16	82.94	82.72	82.51	82.29	82.07	81.85	81.63	81.42
2.00	0.50	14.59	82.82	0.09	8.62	84.01	83.79	83.56	83.34	83.12	82.90	82.67	82.45	82.23	82.01	81.78	81.56	81.34	81.12
2.50	0.50	14.20	82.71	0.09	11.38	83.76	83.53	83.30	83.08	82.85	82.62	82.39	82.17	81.94	81.71	81.48	81.26	81.03	80.80
3.00	0.50	13.81	82.61	0.09	14.29	83.50	83.26	83.03	82.80	82.56	82.33	82.10	81.87	81.63	81.40	81.17	80.93	80.70	80.47
3.50	0.50	13.41	82.50	0.08	17.37	83.22	82.98	82.74	82.50	82.26	82.02	81.79	81.55	81.31	81.07	80.83	80.59	80.35	80.12
4.00	0.50	13.02	82.40	0.08	20.63	82.92	82.68	82.43	82.19	81.94	81.70	81.45	81.21	80.97	80.72	80.48	80.23	79.99	79.74
4.50	0.50	12.63	82.29	0.08	24.08	82.61	82.36	82.11	81.86	81.61	81.35	81.10	80.85	80.60	80.35	80.10	79.85	79.60	79.35
5.00	0.50	12.23	82.19	0.08	27.74	82.28	82.02	81.76	81.50	81.25	80.99	80.73	80.47	80.22	79.96	79.70	79.44	79.19	78.93
5.50	0.50	11.84	82.09	0.07	31.63	81.92	81.66	81.39	81.13	80.87	80.60	80.34	80.07	79.81	79.54	79.28	79.01	78.75	78.48
6.00	0.50	11.45	81.98	0.07	35.79	81.55	81.28	81.00	80.73	80.46	80.19	79.91	79.64	79.37	79.10	78.82	78.55	78.28	78.01
6.50	0.50	11.06	81.88	0.07	40.22	81.15	80.87	80.59	80.30	80.02	79.74	79.46	79.18	78.90	78.62	78.34	78.06	77.78	77.50
7.00	0.50	10.66	81.77	0.07	44.97	80.72	80.43	80.14	79.85	79.56	79.27	78.98	78.69	78.40	78.11	77.82	77.53	77.24	76.95
7.50	0.50	10.27	81.67	0.06	50.06	80.25	79.96	79.66	79.36	79.06	78.76	78.46	78.16	77.87	77.57	77.27	76.97	76.67	76.37
8.00	0.50	9.88	81.56	0.06	55.54	79.76	79.45	79.14	78.83	78.52	78.21	77.91	77.60	77.29	76.98	76.67	76.36	76.05	75.74
8.50	0.50	9.48	81.46	0.06	61.45	79.22	78.90	78.58	78.26	77.94	77.62	77.30	76.99	76.67	76.35	76.03	75.71	75.39	75.07
9.00	0.50	9.09	81.35	0.06	67.84	78.64	78.31	77.98	77.65	77.32	76.99	76.65	76.32	75.99	75.66	75.33	75.00	74.67	74.34
9.50	0.50	8.70	81.25	0.06	74.78	78.01	77.67	77.33	76.98	76.64	76.29	75.95	75.61	75.26	74.92	74.57	74.23	73.88	73.54
10.00	0.50	8.30	81.14	0.05	82.34	77.33	76.97	76.61	76.25	75.90	75.54	75.18	74.82	74.46	74.11	73.75	73.39	73.03	72.67
10.50	0.50	7.91	81.04	0.05	90.61	76.58	76.21	75.83	75.46	75.09	74.71	74.34	73.97	73.59	73.22	72.85	72.47	72.10	71.73
11.00	0.50	7.52	80.93	0.05	99.68	75.76	75.37	74.98	74.59	74.20	73.81	73.42	73.03	72.64	72.25	71.86	71.47	71.08	70.69
11.50	0.50	7.13	80.83	0.05	109.69	74.85	74.44	74.03	73.63	73.22	72.81	72.40	71.99	71.58	71.18	70.77	70.36	69.95	69.54
12.00	0.50	6.73	80.72	0.04	120.79	73.84	73.42	72.99	72.56	72.13	71.70	71.27	70.84	70.41	69.99	69.56	69.13	68.70	68.27
12.50	0.50	6.34	80.62	0.04	133.16	72.72	72.27	71.82	71.37	70.92	70.47	70.01	69.56	69.11	68.66	68.21	67.76	67.31	66.85
13.00	0.50	5.95	80.51	0.04	147.04	71.46	70.99	70.51	70.03	69.56	69.08	68.60	68.13	67.65	67.17	66.70	66.22	65.74	65.26
13.50	0.50	5.55	80.41	0.04	162.73	70.04	69.54	69.03	68.53	68.02	67.51	67.01	66.50	66.00	65.49	64.99	64.48	63.97	63.47
14.00	0.50	5.16	80.30	0.03	180.58	68.43	67.89	67.35	66.81	66.27	65.73	65.19	64.66	64.12	63.58	63.04	62.50	61.96	61.42
14.50	0.50	4.77	80.20	0.03	201.10	66.57	65.99	65.41	64.84	64.26	63.68	63.11	62.53	61.96	61.38	60.80	60.23	59.65	59.07
15.00	0.50	4.38	80.09	0.03	224.93	64.41	63.79	63.17	62.55	61.93	61.31	60.69	60.07	59.45	58.83	58.21	57.59	56.97	56.35

COMBUSTION EFFICIENCY TABLE FOR NUMBER 6 OIL

Properties of Number 6 Oil:

Molecular Weight: $338.0 \frac{lb}{lbm\ mole}$

Specific Heat: $0.480 \frac{BTU}{lb\ R}$

Enthalpy of Formation: $-167 \frac{BTU}{lb}$

Higher Heating Value: $18300.0 \frac{BTU}{lb}$

Dry Products of Combustion						COMBUSTION EFFICIENCY *(Efficiencies are listed by flue gas temperature less surrounding temperature, °F)*													
$\%O_2$	$\%CO$	$\%CO_2$	$\%N_2$	$\%SO_2$	% Excess Air	590	600	610	620	630	640	650	660	670	680	690	700	710	720
0.00	0.50	16.16	83.24	0.10	-1.12	82.03	81.82	81.62	81.41	81.21	81.00	80.80	80.60	80.39	80.19	79.98	79.78	79.57	79.37
0.50	0.50	15.77	83.13	0.10	1.14	81.76	81.56	81.35	81.14	80.93	80.72	80.51	80.30	80.09	79.89	79.68	79.47	79.26	79.05
1.00	0.50	15.38	83.03	0.10	3.51	81.49	81.28	81.06	80.85	80.64	80.42	80.21	80.00	79.78	79.57	79.36	79.14	78.93	78.72
1.50	0.50	14.98	82.92	0.09	6.00	81.20	80.98	80.76	80.55	80.33	80.11	79.89	79.68	79.46	79.24	79.02	78.80	78.59	78.37
2.00	0.50	14.59	82.82	0.09	8.62	80.89	80.67	80.45	80.23	80.00	79.78	79.56	79.34	79.11	78.89	78.67	78.45	78.22	78.00
2.50	0.50	14.20	82.71	0.09	11.38	80.57	80.35	80.12	79.89	79.66	79.44	79.21	78.98	78.75	78.52	78.30	78.07	77.84	77.61
3.00	0.50	13.81	82.61	0.09	14.29	80.23	80.00	79.77	79.54	79.30	79.07	78.84	78.60	78.37	78.14	77.90	77.67	77.44	77.21
3.50	0.50	13.41	82.50	0.08	17.37	79.88	79.64	79.40	79.16	78.92	78.68	78.44	78.21	77.97	77.73	77.49	77.25	77.01	76.77
4.00	0.50	13.02	82.40	0.08	20.63	79.50	79.25	79.01	78.76	78.52	78.27	78.03	77.79	77.54	77.30	77.05	76.81	76.56	76.32
4.50	0.50	12.63	82.29	0.08	24.08	79.10	78.85	78.59	78.34	78.09	77.84	77.59	77.34	77.09	76.84	76.59	76.34	76.09	75.83
5.00	0.50	12.23	82.19	0.08	27.74	78.67	78.41	78.15	77.90	77.64	77.38	77.12	76.87	76.61	76.35	76.09	75.84	75.58	75.32
5.50	0.50	11.84	82.09	0.07	31.63	78.22	77.95	77.69	77.42	77.16	76.89	76.63	76.36	76.10	75.83	75.57	75.30	75.04	74.77
6.00	0.50	11.45	81.98	0.07	35.79	77.73	77.46	77.19	76.92	76.64	76.37	76.10	75.83	75.55	75.28	75.01	74.74	74.46	74.19
6.50	0.50	11.06	81.88	0.07	40.22	77.22	76.94	76.66	76.38	76.10	75.81	75.53	75.25	74.97	74.69	74.41	74.13	73.85	73.57
7.00	0.50	10.66	81.77	0.07	44.97	76.67	76.38	76.09	75.80	75.51	75.22	74.93	74.64	74.35	74.06	73.77	73.48	73.19	72.90
7.50	0.50	10.27	81.67	0.06	50.06	76.07	75.77	75.48	75.18	74.88	74.58	74.28	73.98	73.68	73.38	73.09	72.79	72.49	72.19
8.00	0.50	9.88	81.56	0.06	55.54	75.44	75.13	74.82	74.51	74.20	73.89	73.58	73.27	72.97	72.66	72.35	72.04	71.73	71.42
8.50	0.50	9.48	81.46	0.06	61.45	74.75	74.43	74.11	73.79	73.47	73.15	72.83	72.51	72.19	71.87	71.55	71.23	70.91	70.59
9.00	0.50	9.09	81.35	0.06	67.84	74.00	73.67	73.34	73.01	72.68	72.35	72.02	71.68	71.35	71.02	70.69	70.36	70.03	69.70
9.50	0.50	8.70	81.25	0.06	74.78	73.20	72.85	72.51	72.16	71.82	71.48	71.13	70.79	70.44	70.10	69.76	69.41	69.07	68.72
10.00	0.50	8.30	81.14	0.05	82.34	72.32	71.96	71.60	71.24	70.88	70.53	70.17	69.81	69.45	69.09	68.74	68.38	68.02	67.66
10.50	0.50	7.91	81.04	0.05	90.61	71.35	70.98	70.61	70.24	69.86	69.49	69.12	68.74	68.37	68.00	67.62	67.25	66.88	66.50
11.00	0.50	7.52	80.93	0.05	99.68	70.30	69.91	69.52	69.13	68.74	68.35	67.96	67.57	67.18	66.79	66.40	66.01	65.62	65.23
11.50	0.50	7.13	80.83	0.05	109.69	69.13	68.73	68.32	67.91	67.50	67.09	66.68	66.28	65.87	65.46	65.05	64.64	64.23	63.83
12.00	0.50	6.73	80.72	0.04	120.79	67.84	67.41	66.99	66.56	66.13	65.70	65.27	64.84	64.41	63.98	63.56	63.13	62.70	62.27
12.50	0.50	6.34	80.62	0.04	133.16	66.40	65.95	65.50	65.05	64.60	64.15	63.69	63.24	62.79	62.34	61.89	61.44	60.99	60.53
13.00	0.50	5.95	80.51	0.04	147.04	64.79	64.31	63.83	63.36	62.88	62.40	61.93	61.45	60.97	60.50	60.02	59.54	59.07	58.59
13.50	0.50	5.55	80.41	0.04	162.73	62.96	62.46	61.95	61.45	60.94	60.43	59.93	59.42	58.92	58.41	57.91	57.40	56.89	56.39
14.00	0.50	5.16	80.30	0.03	180.58	60.89	60.35	59.81	59.27	58.73	58.19	57.65	57.12	56.58	56.04	55.50	54.96	54.42	53.88
14.50	0.50	4.77	80.20	0.03	201.10	58.50	57.92	57.35	56.77	56.19	55.62	55.04	54.46	53.89	53.31	52.74	52.16	51.58	51.01
15.00	0.50	4.38	80.09	0.03	224.93	55.73	55.11	54.49	53.87	53.24	52.62	52.00	51.38	50.76	50.14	49.52	48.90	48.28	47.66

COMBUSTION EFFICIENCY TABLE FOR COAL

Properties of Coal:

Molecular Weight: $483.4 \frac{lb}{lbm\ mole}$

Specific Heat: $0.200 \frac{BTU}{lb\ R}$

Enthalpy of Formation: $-2374 \frac{BTU}{lb}$

Higher Heating Value: $14203.0 \frac{BTU}{lb}$

Dry Products of Combustion						COMBUSTION EFFICIENCY *(Efficiencies are listed by flue gas temperature less surrounding temperature, °F)*													
$\%O_2$	$\%CO$	$\%CO_2$	$\%N_2$	$\%SO_2$	% Excess Air	170	180	190	200	210	220	230	240	250	260	270	280	290	300
0.00	0.00	18.58	81.42	0.00	0.00	92.20	91.96	91.71	91.46	91.22	90.97	90.73	90.48	90.23	89.99	89.74	89.49	89.25	89.00
0.50	0.00	18.13	81.36	0.00	2.37	92.11	91.86	91.61	91.36	91.11	90.86	90.60	90.35	90.10	89.85	89.60	89.35	89.10	88.84
1.00	0.00	17.69	81.31	0.00	4.85	92.02	91.76	91.51	91.25	90.99	90.73	90.48	90.22	89.96	89.71	89.45	89.19	88.94	88.68
1.50	0.00	17.25	81.25	0.00	7.46	91.92	91.66	91.39	91.13	90.87	90.61	90.34	90.08	89.82	89.56	89.29	89.03	88.77	88.50
2.00	0.00	16.81	81.19	0.00	10.21	91.82	91.55	91.28	91.01	90.74	90.47	90.20	89.93	89.67	89.40	89.13	88.86	88.59	88.32
2.50	0.00	16.37	81.13	0.00	13.10	91.71	91.43	91.16	90.88	90.61	90.33	90.06	89.78	89.50	89.23	88.95	88.68	88.40	88.13
3.00	0.00	15.92	81.07	0.00	16.16	91.59	91.31	91.03	90.74	90.46	90.18	89.90	89.62	89.33	89.05	88.77	88.49	88.21	87.92
3.50	0.00	15.48	81.02	0.00	19.39	91.47	91.18	90.89	90.60	90.31	90.02	89.73	89.44	89.15	88.87	88.58	88.29	88.00	87.71
4.00	0.00	15.04	80.96	0.00	22.82	91.34	91.04	90.75	90.45	90.15	89.85	89.56	89.26	88.96	88.67	88.37	88.07	87.78	87.48
4.50	0.00	14.60	80.90	0.00	26.44	91.20	90.90	90.59	90.29	89.98	89.68	89.37	89.07	88.76	88.46	88.15	87.85	87.54	87.24
5.00	0.00	14.16	80.84	0.00	30.30	91.06	90.74	90.43	90.12	89.80	89.49	89.18	88.86	88.55	88.23	87.92	87.61	87.29	86.98
5.50	0.00	13.71	80.78	0.00	34.41	90.90	90.58	90.26	89.93	89.61	89.29	88.97	88.64	88.32	88.00	87.67	87.35	87.03	86.71
6.00	0.00	13.27	80.73	0.00	38.78	90.73	90.40	90.07	89.74	89.41	89.07	88.74	88.41	88.08	87.74	87.41	87.08	86.75	86.42
6.50	0.00	12.83	80.67	0.00	43.46	90.56	90.22	89.87	89.53	89.19	88.84	88.50	88.16	87.82	87.47	87.13	86.79	86.45	86.10
7.00	0.00	12.39	80.61	0.00	48.48	90.37	90.01	89.66	89.31	88.95	88.60	88.25	87.89	87.54	87.18	86.83	86.48	86.12	85.77
7.50	0.00	11.94	80.55	0.00	53.86	90.16	89.80	89.43	89.07	88.70	88.34	87.97	87.60	87.24	86.87	86.51	86.14	85.77	85.41
8.00	0.00	11.50	80.50	0.00	59.66	89.94	89.57	89.19	88.81	88.43	88.05	87.67	87.29	86.92	86.54	86.16	85.78	85.40	85.02
8.50	0.00	11.06	80.44	0.00	65.92	89.71	89.32	88.92	88.53	88.14	87.74	87.35	86.96	86.57	86.17	85.78	85.39	85.00	84.60
9.00	0.00	10.62	80.38	0.00	72.71	89.45	89.04	88.64	88.23	87.82	87.41	87.01	86.60	86.19	85.78	85.37	84.97	84.56	84.15
9.50	0.00	10.18	80.32	0.00	80.08	89.17	88.75	88.32	87.90	87.48	87.05	86.63	86.20	85.78	85.36	84.93	84.51	84.08	83.66
10.00	0.00	9.73	80.26	0.00	88.13	88.87	88.43	87.98	87.54	87.10	86.66	86.22	85.77	85.33	84.89	84.45	84.01	83.57	83.12
10.50	0.00	9.29	80.21	0.00	96.94	88.53	88.07	87.61	87.15	86.69	86.23	85.77	85.30	84.84	84.38	83.92	83.46	83.00	82.54
11.00	0.00	8.85	80.15	0.00	106.63	88.17	87.68	87.20	86.72	86.24	85.75	85.27	84.79	84.30	83.82	83.34	82.85	82.37	81.89
11.50	0.00	8.41	80.09	0.00	117.33	87.76	87.26	86.75	86.24	85.74	85.23	84.72	84.22	83.71	83.20	82.69	82.19	81.68	81.17
12.00	0.00	7.97	80.03	0.00	129.23	87.31	86.78	86.25	85.71	85.18	84.65	84.11	83.58	83.05	82.51	81.98	81.45	80.91	80.38
12.50	0.00	7.52	79.98	0.00	142.53	86.81	86.25	85.68	85.12	84.56	84.00	83.43	82.87	82.31	81.74	81.18	80.62	80.06	79.49
13.00	0.00	7.08	79.92	0.00	157.48	86.24	85.65	85.05	84.46	83.86	83.26	82.67	82.07	81.48	80.88	80.28	79.69	79.09	78.50
13.50	0.00	6.64	79.86	0.00	174.43	85.60	84.97	84.33	83.70	83.07	82.43	81.80	81.17	80.53	79.90	79.27	78.63	78.00	77.37
14.00	0.00	6.20	79.80	0.00	193.79	84.87	84.19	83.52	82.84	82.16	81.49	80.81	80.13	79.46	78.78	78.10	77.43	76.75	76.07
14.50	0.00	5.76	79.74	0.00	216.13	84.02	83.30	82.57	81.84	81.12	80.39	79.67	78.94	78.21	77.49	76.76	76.04	75.31	74.58
15.00	0.00	5.31	79.69	0.00	242.19	83.04	82.25	81.47	80.68	79.90	79.12	78.33	77.55	76.76	75.98	75.20	74.41	73.63	72.84

COMBUSTION EFFICIENCY TABLE FOR COAL

Properties of Coal:

Molecular Weight: 483.4 $\frac{lb}{lbm\ mole}$

Specific Heat: 0.200 $\frac{BTU}{lb\ R}$

Enthalpy of Formation: -2374 $\frac{BTU}{lb}$

Higher Heating Value: 14203.0 $\frac{BTU}{lb}$

Dry Products of Combustion						COMBUSTION EFFICIENCY *(Efficiencies are listed by flue gas temperature less surrounding temperature, °F)*													
$\%O_2$	$\%CO$	$\%CO_2$	$\%N_2$	$\%SO_2$	% Excess Air	310	320	330	340	350	360	370	380	390	400	410	420	430	440
0.00	0.00	18.58	81.42	0.00	0.00	88.76	88.51	88.26	88.02	87.77	87.53	87.28	87.03	86.79	86.54	86.29	86.05	85.80	85.56
0.50	0.00	18.13	81.36	0.00	2.37	88.59	88.34	88.09	87.84	87.59	87.34	87.08	86.83	86.58	86.33	86.08	85.83	85.58	85.33
1.00	0.00	17.69	81.31	0.00	4.85	88.42	88.17	87.91	87.65	87.39	87.14	86.88	86.62	86.37	86.11	85.85	85.60	85.34	85.08
1.50	0.00	17.25	81.25	0.00	7.46	88.24	87.98	87.72	87.45	87.19	86.93	86.67	86.40	86.14	85.88	85.61	85.35	85.09	84.83
2.00	0.00	16.81	81.19	0.00	10.21	88.05	87.78	87.52	87.25	86.98	86.71	86.44	86.17	85.90	85.63	85.36	85.10	84.83	84.56
2.50	0.00	16.37	81.13	0.00	13.10	87.85	87.58	87.30	87.03	86.75	86.48	86.20	85.93	85.65	85.38	85.10	84.83	84.55	84.27
3.00	0.00	15.92	81.07	0.00	16.16	87.64	87.36	87.08	86.80	86.51	86.23	85.95	85.67	85.39	85.10	84.82	84.54	84.26	83.98
3.50	0.00	15.48	81.02	0.00	19.39	87.42	87.13	86.84	86.55	86.26	85.97	85.68	85.39	85.11	84.82	84.53	84.24	83.95	83.66
4.00	0.00	15.04	80.96	0.00	22.82	87.18	86.89	86.59	86.29	86.00	85.70	85.40	85.11	84.81	84.51	84.22	83.92	83.62	83.32
4.50	0.00	14.60	80.90	0.00	26.44	86.93	86.63	86.32	86.02	85.71	85.41	85.10	84.80	84.49	84.19	83.88	83.58	83.27	82.97
5.00	0.00	14.16	80.84	0.00	30.30	86.67	86.35	86.04	85.73	85.41	85.10	84.79	84.47	84.16	83.85	83.53	83.22	82.91	82.59
5.50	0.00	13.71	80.78	0.00	34.41	86.38	86.06	85.74	85.42	85.09	84.77	84.45	84.13	83.80	83.48	83.16	82.84	82.51	82.19
6.00	0.00	13.27	80.73	0.00	38.78	86.08	85.75	85.42	85.09	84.75	84.42	84.09	83.76	83.42	83.09	82.76	82.43	82.10	81.76
6.50	0.00	12.83	80.67	0.00	43.46	85.76	85.42	85.07	84.73	84.39	84.05	83.70	83.36	83.02	82.68	82.33	81.99	81.65	81.31
7.00	0.00	12.39	80.61	0.00	48.48	85.41	85.06	84.71	84.35	84.00	83.65	83.29	82.94	82.58	82.23	81.88	81.52	81.17	80.81
7.50	0.00	11.94	80.55	0.00	53.86	85.04	84.68	84.31	83.95	83.58	83.21	82.85	82.48	82.12	81.75	81.39	81.02	80.65	80.29
8.00	0.00	11.50	80.50	0.00	59.66	84.64	84.26	83.89	83.51	83.13	82.75	82.37	81.99	81.61	81.24	80.86	80.48	80.10	79.72
8.50	0.00	11.06	80.44	0.00	65.92	84.21	83.82	83.43	83.03	82.64	82.25	81.86	81.46	81.07	80.68	80.29	79.89	79.50	79.11
9.00	0.00	10.62	80.38	0.00	72.71	83.74	83.34	82.93	82.52	82.11	81.71	81.30	80.89	80.48	80.08	79.67	79.26	78.85	78.44
9.50	0.00	10.18	80.32	0.00	80.08	83.24	82.81	82.39	81.96	81.54	81.12	80.69	80.27	79.84	79.42	79.00	78.57	78.15	77.72
10.00	0.00	9.73	80.26	0.00	88.13	82.68	82.24	81.80	81.36	80.91	80.47	80.03	79.59	79.15	78.70	78.26	77.82	77.38	76.94
10.50	0.00	9.29	80.21	0.00	96.94	82.07	81.61	81.15	80.69	80.23	79.77	79.31	78.84	78.38	77.92	77.46	77.00	76.54	76.08
11.00	0.00	8.85	80.15	0.00	106.63	81.41	80.92	80.44	79.96	79.47	78.99	78.51	78.03	77.54	77.06	76.58	76.09	75.61	75.13
11.50	0.00	8.41	80.09	0.00	117.33	80.67	80.16	79.65	79.15	78.64	78.13	77.63	77.12	76.61	76.11	75.60	75.09	74.59	74.08
12.00	0.00	7.97	80.03	0.00	129.23	79.85	79.31	78.78	78.25	77.72	77.18	76.65	76.12	75.58	75.05	74.52	73.98	73.45	72.92
12.50	0.00	7.52	79.98	0.00	142.53	78.93	78.37	77.81	77.24	76.68	76.12	75.56	74.99	74.43	73.87	73.30	72.74	72.18	71.62
13.00	0.00	7.08	79.92	0.00	157.48	77.90	77.30	76.71	76.11	75.52	74.92	74.32	73.73	73.13	72.54	71.94	71.35	70.75	70.15
13.50	0.00	6.64	79.86	0.00	174.43	76.73	76.10	75.47	74.83	74.20	73.56	72.93	72.30	71.66	71.03	70.40	69.76	69.13	68.50
14.00	0.00	6.20	79.80	0.00	193.79	75.40	74.72	74.04	73.37	72.69	72.01	71.34	70.66	69.98	69.31	68.63	67.96	67.28	66.60
14.50	0.00	5.76	79.74	0.00	216.13	73.86	73.13	72.40	71.68	70.95	70.23	69.50	68.77	68.05	67.32	66.60	65.87	65.14	64.42
15.00	0.00	5.31	79.69	0.00	242.19	72.06	71.28	70.49	69.71	68.92	68.14	67.36	66.57	65.79	65.00	64.22	63.44	62.65	61.87

COMBUSTION EFFICIENCY TABLE FOR COAL

Properties of Coal:

Molecular Weight: $483.4 \frac{lb}{lbm\ mole}$

Specific Heat: $0.200 \frac{BTU}{lb\ R}$

Enthalpy of Formation: $-2374 \frac{BTU}{lb}$

Higher Heating Value: $14203.0 \frac{BTU}{lb}$

Dry Products of Combustion						COMBUSTION EFFICIENCY *(Efficiencies are listed by flue gas temperature less surrounding temperature, °F)*													
$\%O_2$	$\%CO$	$\%CO_2$	$\%N_2$	$\%SO_2$	% Excess Air	450	460	470	480	490	500	510	520	530	540	550	560	570	580
0.00	0.00	18.58	81.42	0.00	0.00	85.31	85.06	84.82	84.57	84.33	84.08	83.83	83.59	83.34	83.09	82.85	82.60	82.36	82.11
0.50	0.00	18.13	81.36	0.00	2.37	85.07	84.82	84.57	84.32	84.07	83.82	83.57	83.31	83.06	82.81	82.56	82.31	82.06	81.81
1.00	0.00	17.69	81.31	0.00	4.85	84.83	84.57	84.31	84.05	83.80	83.54	83.28	83.03	82.77	82.51	82.26	82.00	81.74	81.49
1.50	0.00	17.25	81.25	0.00	7.46	84.56	84.30	84.04	83.78	83.51	83.25	82.99	82.73	82.46	82.20	81.94	81.67	81.41	81.15
2.00	0.00	16.81	81.19	0.00	10.21	84.29	84.02	83.75	83.48	83.21	82.95	82.68	82.41	82.14	81.87	81.60	81.33	81.06	80.79
2.50	0.00	16.37	81.13	0.00	13.10	84.00	83.72	83.45	83.17	82.90	82.62	82.35	82.07	81.80	81.52	81.25	80.97	80.70	80.42
3.00	0.00	15.92	81.07	0.00	16.16	83.69	83.41	83.13	82.85	82.57	82.28	82.00	81.72	81.44	81.16	80.87	80.59	80.31	80.03
3.50	0.00	15.48	81.02	0.00	19.39	83.37	83.08	82.79	82.50	82.21	81.92	81.63	81.35	81.06	80.77	80.48	80.19	79.90	79.61
4.00	0.00	15.04	80.96	0.00	22.82	83.03	82.73	82.43	82.14	81.84	81.54	81.25	80.95	80.65	80.36	80.06	79.76	79.47	79.17
4.50	0.00	14.60	80.90	0.00	26.44	82.67	82.36	82.06	81.75	81.45	81.14	80.84	80.53	80.23	79.92	79.62	79.31	79.01	78.70
5.00	0.00	14.16	80.84	0.00	30.30	82.28	81.97	81.65	81.34	81.03	80.71	80.40	80.09	79.77	79.46	79.14	78.83	78.52	78.20
5.50	0.00	13.71	80.78	0.00	34.41	81.87	81.55	81.22	80.90	80.58	80.26	79.93	79.61	79.29	78.97	78.64	78.32	78.00	77.68
6.00	0.00	13.27	80.73	0.00	38.78	81.43	81.10	80.77	80.43	80.10	79.77	79.44	79.10	78.77	78.44	78.11	77.78	77.44	77.11
6.50	0.00	12.83	80.67	0.00	43.46	80.96	80.62	80.28	79.93	79.59	79.25	78.91	78.56	78.22	77.88	77.54	77.19	76.85	76.51
7.00	0.00	12.39	80.61	0.00	48.48	80.46	80.11	79.75	79.40	79.05	78.69	78.34	77.98	77.63	77.28	76.92	76.57	76.22	75.86
7.50	0.00	11.94	80.55	0.00	53.86	79.92	79.56	79.19	78.83	78.46	78.09	77.73	77.36	77.00	76.63	76.26	75.90	75.53	75.17
8.00	0.00	11.50	80.50	0.00	59.66	79.34	78.96	78.59	78.21	77.83	77.45	77.07	76.69	76.31	75.93	75.56	75.18	74.80	74.42
8.50	0.00	11.06	80.44	0.00	65.92	78.72	78.32	77.93	77.54	77.15	76.75	76.36	75.97	75.58	75.18	74.79	74.40	74.01	73.61
9.00	0.00	10.62	80.38	0.00	72.71	78.04	77.63	77.22	76.81	76.41	76.00	75.59	75.18	74.78	74.37	73.96	73.55	73.15	72.74
9.50	0.00	10.18	80.32	0.00	80.08	77.30	76.88	76.45	76.03	75.60	75.18	74.76	74.33	73.91	73.48	73.06	72.64	72.21	71.79
10.00	0.00	9.73	80.26	0.00	88.13	76.50	76.05	75.61	75.17	74.73	74.29	73.84	73.40	72.96	72.52	72.08	71.63	71.19	70.75
10.50	0.00	9.29	80.21	0.00	96.94	75.61	75.15	74.69	74.23	73.77	73.31	72.85	72.38	71.92	71.46	71.00	70.54	70.08	69.62
11.00	0.00	8.85	80.15	0.00	106.63	74.64	74.16	73.68	73.20	72.71	72.23	71.75	71.26	70.78	70.30	69.82	69.33	68.85	68.37
11.50	0.00	8.41	80.09	0.00	117.33	73.57	73.07	72.56	72.05	71.55	71.04	70.53	70.03	69.52	69.01	68.51	68.00	67.49	66.99
12.00	0.00	7.97	80.03	0.00	129.23	72.38	71.85	71.32	70.78	70.25	69.72	69.18	68.65	68.12	67.59	67.05	66.52	65.99	65.45
12.50	0.00	7.52	79.98	0.00	142.53	71.05	70.49	69.93	69.37	68.80	68.24	67.68	67.12	66.55	65.99	65.43	64.86	64.30	63.74
13.00	0.00	7.08	79.92	0.00	157.48	69.56	68.96	68.37	67.77	67.17	66.58	65.98	65.39	64.79	64.19	63.60	63.00	62.41	61.81
13.50	0.00	6.64	79.86	0.00	174.43	67.86	67.23	66.60	65.96	65.33	64.69	64.06	63.43	62.79	62.16	61.53	60.89	60.26	59.63
14.00	0.00	6.20	79.80	0.00	193.79	65.93	65.26	64.57	63.90	63.22	62.54	61.87	61.19	60.51	59.84	59.16	58.48	57.81	57.13
14.50	0.00	5.76	79.74	0.00	216.13	63.69	62.96	62.24	61.51	60.79	60.06	59.33	58.61	57.88	57.16	56.43	55.70	54.98	54.25
15.00	0.00	5.31	79.69	0.00	242.19	61.08	60.30	59.52	58.73	57.95	57.16	56.38	55.60	54.81	54.03	53.24	52.46	51.68	50.89

COMBUSTION EFFICIENCY TABLE FOR COAL

Properties of Coal:

Molecular Weight: 483.4 $\frac{\text{lb}}{\text{lbm mole}}$

Specific Heat: 0.200 $\frac{\text{BTU}}{\text{lb R}}$

Enthalpy of Formation: -2374 $\frac{\text{BTU}}{\text{lb}}$

Higher Heating Value: 14203.0 $\frac{\text{BTU}}{\text{lb}}$

Dry Products of Combustion						COMBUSTION EFFICIENCY *(Efficiencies are listed by flue gas temperature less surrounding temperature, °F)*													
$\%O_2$	$\%CO$	$\%CO_2$	$\%N_2$	$\%SO_2$	% Excess Air	590	600	610	620	630	640	650	660	670	680	690	700	710	720
0.00	0.00	18.58	81.42	0.00	0.00	81.86	81.62	81.37	81.13	80.88	80.63	80.39	80.14	79.89	79.65	79.40	79.16	78.91	78.66
0.50	0.00	18.13	81.36	0.00	2.37	81.55	81.30	81.05	80.80	80.55	80.30	80.05	79.79	79.54	79.29	79.04	78.79	78.54	78.29
1.00	0.00	17.69	81.31	0.00	4.85	81.23	80.97	80.71	80.46	80.20	79.94	79.69	79.43	79.17	78.92	78.66	78.40	78.15	77.89
1.50	0.00	17.25	81.25	0.00	7.46	80.89	80.62	80.36	80.10	79.84	79.57	79.31	79.05	78.78	78.52	78.26	78.00	77.73	77.47
2.00	0.00	16.81	81.19	0.00	10.21	80.53	80.26	79.99	79.72	79.45	79.18	78.91	78.64	78.38	78.11	77.84	77.57	77.30	77.03
2.50	0.00	16.37	81.13	0.00	13.10	80.15	79.87	79.60	79.32	79.04	78.77	78.49	78.22	77.94	77.67	77.39	77.12	76.84	76.57
3.00	0.00	15.92	81.07	0.00	16.16	79.74	79.46	79.18	78.90	78.62	78.33	78.05	77.77	77.49	77.21	76.92	76.64	76.36	76.08
3.50	0.00	15.48	81.02	0.00	19.39	79.32	79.03	78.74	78.45	78.16	77.88	77.59	77.30	77.01	76.72	76.43	76.14	75.85	75.56
4.00	0.00	15.04	80.96	0.00	22.82	78.87	78.58	78.28	77.98	77.69	77.39	77.09	76.79	76.50	76.20	75.90	75.61	75.31	75.01
4.50	0.00	14.60	80.90	0.00	26.44	78.40	78.09	77.79	77.48	77.18	76.87	76.57	76.26	75.96	75.65	75.35	75.04	74.74	74.43
5.00	0.00	14.16	80.84	0.00	30.30	77.89	77.58	77.26	76.95	76.64	76.32	76.01	75.70	75.38	75.07	74.76	74.44	74.13	73.82
5.50	0.00	13.71	80.78	0.00	34.41	77.35	77.03	76.71	76.39	76.06	75.74	75.42	75.09	74.77	74.45	74.13	73.80	73.48	73.16
6.00	0.00	13.27	80.73	0.00	38.78	76.78	76.45	76.11	75.78	75.45	75.12	74.79	74.45	74.12	73.79	73.46	73.12	72.79	72.46
6.50	0.00	12.83	80.67	0.00	43.46	76.17	75.82	75.48	75.14	74.79	74.45	74.11	73.77	73.42	73.08	72.74	72.40	72.05	71.71
7.00	0.00	12.39	80.61	0.00	48.48	75.51	75.15	74.80	74.45	74.09	73.74	73.38	73.03	72.68	72.32	71.97	71.62	71.26	70.91
7.50	0.00	11.94	80.55	0.00	53.86	74.80	74.44	74.07	73.70	73.34	72.97	72.61	72.24	71.88	71.51	71.14	70.78	70.41	70.05
8.00	0.00	11.50	80.50	0.00	59.66	74.04	73.66	73.28	72.91	72.53	72.15	71.77	71.39	71.01	70.63	70.25	69.88	69.50	69.12
8.50	0.00	11.06	80.44	0.00	65.92	73.22	72.83	72.43	72.04	71.65	71.26	70.86	70.47	70.08	69.69	69.29	68.90	68.51	68.12
9.00	0.00	10.62	80.38	0.00	72.71	72.33	71.92	71.52	71.11	70.70	70.29	69.88	69.48	69.07	68.66	68.25	67.85	67.44	67.03
9.50	0.00	10.18	80.32	0.00	80.08	71.36	70.94	70.52	70.09	69.67	69.24	68.82	68.40	67.97	67.55	67.12	66.70	66.28	65.85
10.00	0.00	9.73	80.26	0.00	88.13	70.31	69.87	69.43	68.98	68.54	68.10	67.66	67.22	66.77	66.33	65.89	65.45	65.01	64.56
10.50	0.00	9.29	80.21	0.00	96.94	69.15	68.69	68.23	67.77	67.31	66.85	66.39	65.92	65.46	65.00	64.54	64.08	63.62	63.16
11.00	0.00	8.85	80.15	0.00	106.63	67.88	67.40	66.92	66.43	65.95	65.47	64.99	64.50	64.02	63.54	63.05	62.57	62.09	61.61
11.50	0.00	8.41	80.09	0.00	117.33	66.48	65.97	65.47	64.96	64.45	63.95	63.44	62.93	62.43	61.92	61.41	60.91	60.40	59.89
12.00	0.00	7.97	80.03	0.00	129.23	64.92	64.39	63.85	63.32	62.79	62.25	61.72	61.19	60.65	60.12	59.59	59.05	58.52	57.99
12.50	0.00	7.52	79.98	0.00	142.53	63.18	62.61	62.05	61.49	60.93	60.36	59.80	59.24	58.67	58.11	57.55	56.99	56.42	55.86
13.00	0.00	7.08	79.92	0.00	157.48	61.22	60.62	60.02	59.43	58.83	58.24	57.64	57.04	56.45	55.85	55.26	54.66	54.06	53.47
13.50	0.00	6.64	79.86	0.00	174.43	58.99	58.36	57.73	57.09	56.46	55.83	55.19	54.56	53.92	53.29	52.66	52.02	51.39	50.76
14.00	0.00	6.20	79.80	0.00	193.79	56.45	55.78	55.10	54.42	53.75	53.07	52.39	51.72	51.04	50.37	49.69	49.01	48.34	47.66
14.50	0.00	5.76	79.74	0.00	216.13	53.52	52.80	52.07	51.35	50.62	49.89	49.17	48.44	47.72	46.99	46.26	45.54	44.81	44.08
15.00	0.00	5.31	79.69	0.00	242.19	50.11	49.32	48.54	47.76	46.97	46.19	45.40	44.62	43.84	43.05	42.27	41.48	40.70	39.92

COMBUSTION EFFICIENCY TABLE FOR COAL

Properties of Coal:

Molecular Weight: $483.4 \frac{lb}{lbm\ mole}$

Specific Heat: $0.200 \frac{BTU}{lb\ R}$

Enthalpy of Formation: $-2374 \frac{BTU}{lb}$

Higher Heating Value: $14203.0 \frac{BTU}{lb}$

Dry Products of Combustion						COMBUSTION EFFICIENCY *(Efficiencies are listed by flue gas temperature less surrounding temperature, °F)*													
$\%O_2$	$\%CO$	$\%CO_2$	$\%N_2$	$\%SO_2$	% Excess Air	170	180	190	200	210	220	230	240	250	260	270	280	290	300
0.00	0.10	18.51	81.39	0.00	-0.23	92.03	91.78	91.54	91.29	91.05	90.80	90.55	90.31	90.06	89.82	89.57	89.33	89.08	88.83
0.50	0.10	18.07	81.33	0.00	2.12	91.93	91.68	91.43	91.18	90.93	90.68	90.43	90.18	89.93	89.68	89.43	89.17	88.92	88.67
1.00	0.10	17.63	81.27	0.00	4.60	91.84	91.58	91.32	91.07	90.81	90.55	90.30	90.04	89.78	89.53	89.27	89.02	88.76	88.50
1.50	0.10	17.19	81.21	0.00	7.20	91.73	91.47	91.21	90.95	90.68	90.42	90.16	89.90	89.64	89.37	89.11	88.85	88.59	88.32
2.00	0.10	16.74	81.15	0.00	9.93	91.62	91.36	91.09	90.82	90.55	90.28	90.01	89.75	89.48	89.21	88.94	88.67	88.41	88.14
2.50	0.10	16.30	81.10	0.00	12.81	91.51	91.23	90.96	90.69	90.41	90.14	89.86	89.59	89.31	89.04	88.76	88.49	88.21	87.94
3.00	0.10	15.86	81.04	0.00	15.86	91.39	91.11	90.83	90.54	90.26	89.98	89.70	89.42	89.14	88.86	88.57	88.29	88.01	87.73
3.50	0.10	15.42	80.98	0.00	19.07	91.26	90.97	90.68	90.40	90.11	89.82	89.53	89.24	88.95	88.66	88.38	88.09	87.80	87.51
4.00	0.10	14.97	80.92	0.00	22.48	91.13	90.83	90.53	90.24	89.94	89.64	89.35	89.05	88.76	88.46	88.16	87.87	87.57	87.28
4.50	0.10	14.53	80.87	0.00	26.09	90.98	90.68	90.37	90.07	89.77	89.46	89.16	88.85	88.55	88.24	87.94	87.64	87.33	87.03
5.00	0.10	14.09	80.81	0.00	29.92	90.83	90.52	90.20	89.89	89.58	89.27	88.95	88.64	88.33	88.02	87.70	87.39	87.08	86.77
5.50	0.10	13.65	80.75	0.00	34.01	90.67	90.35	90.02	89.70	89.38	89.06	88.74	88.42	88.09	87.77	87.45	87.13	86.81	86.49
6.00	0.10	13.21	80.69	0.00	38.36	90.49	90.16	89.83	89.50	89.17	88.84	88.51	88.17	87.84	87.51	87.18	86.85	86.52	86.19
6.50	0.10	12.76	80.63	0.00	43.01	90.31	89.97	89.63	89.28	88.94	88.60	88.26	87.92	87.58	87.23	86.89	86.55	86.21	85.87
7.00	0.10	12.32	80.58	0.00	48.00	90.11	89.76	89.41	89.05	88.70	88.35	87.99	87.64	87.29	86.94	86.58	86.23	85.88	85.53
7.50	0.10	11.88	80.52	0.00	53.35	89.90	89.53	89.17	88.80	88.44	88.08	87.71	87.35	86.98	86.62	86.25	85.89	85.52	85.16
8.00	0.10	11.44	80.46	0.00	59.11	89.67	89.29	88.91	88.54	88.16	87.78	87.41	87.03	86.65	86.27	85.90	85.52	85.14	84.76
8.50	0.10	11.00	80.40	0.00	65.33	89.42	89.03	88.64	88.25	87.86	87.47	87.07	86.68	86.29	85.90	85.51	85.12	84.73	84.34
9.00	0.10	10.55	80.35	0.00	72.07	89.15	88.75	88.34	87.94	87.53	87.12	86.72	86.31	85.90	85.50	85.09	84.69	84.28	83.87
9.50	0.10	10.11	80.29	0.00	79.39	88.86	88.44	88.02	87.60	87.17	86.75	86.33	85.91	85.48	85.06	84.64	84.22	83.79	83.37
10.00	0.10	9.67	80.23	0.00	87.37	88.55	88.11	87.67	87.23	86.79	86.35	85.91	85.47	85.02	84.58	84.14	83.70	83.26	82.82
10.50	0.10	9.23	80.17	0.00	96.11	88.20	87.74	87.28	86.82	86.36	85.90	85.44	84.98	84.52	84.06	83.60	83.14	82.68	82.22
11.00	0.10	8.78	80.11	0.00	105.72	87.82	87.34	86.86	86.37	85.89	85.41	84.93	84.45	83.97	83.49	83.01	82.53	82.05	81.56
11.50	0.10	8.34	80.06	0.00	116.34	87.40	86.89	86.39	85.88	85.38	84.87	84.37	83.86	83.36	82.85	82.35	81.85	81.34	80.84
12.00	0.10	7.90	80.00	0.00	128.13	86.93	86.40	85.87	85.33	84.80	84.27	83.74	83.21	82.68	82.15	81.62	81.09	80.56	80.03
12.50	0.10	7.46	79.94	0.00	141.30	86.40	85.84	85.28	84.72	84.16	83.60	83.04	82.48	81.92	81.36	80.80	80.24	79.68	79.12
13.00	0.10	7.02	79.88	0.00	156.11	85.81	85.22	84.63	84.04	83.44	82.85	82.26	81.67	81.07	80.48	79.89	79.29	78.70	78.11
13.50	0.10	6.57	79.82	0.00	172.87	85.15	84.52	83.89	83.26	82.63	82.00	81.37	80.74	80.11	79.48	78.85	78.22	77.59	76.96
14.00	0.10	6.13	79.77	0.00	192.02	84.39	83.72	83.04	82.37	81.70	81.02	80.35	79.68	79.01	78.33	77.66	76.99	76.32	75.64
14.50	0.10	5.69	79.71	0.00	214.09	83.51	82.79	82.07	81.35	80.62	79.90	79.18	78.46	77.74	77.02	76.29	75.57	74.85	74.13
15.00	0.10	5.25	79.65	0.00	239.81	82.49	81.71	80.93	80.15	79.37	78.59	77.82	77.04	76.26	75.48	74.70	73.92	73.14	72.37

COMBUSTION EFFICIENCY TABLE FOR COAL

Properties of Coal:

Molecular Weight: 483.4 $\frac{lb}{lbm\ mole}$

Specific Heat: 0.200 $\frac{BTU}{lb\ R}$

Enthalpy of Formation: -2374 $\frac{BTU}{lb}$

Higher Heating Value: 14203.0 $\frac{BTU}{lb}$

Dry Products of Combustion						COMBUSTION EFFICIENCY *(Efficiencies are listed by flue gas temperature less surrounding temperature, °F)*													
$\%O_2$	$\%CO$	$\%CO_2$	$\%N_2$	$\%SO_2$	% Excess Air	310	320	330	340	350	360	370	380	390	400	410	420	430	440
0.00	0.10	18.51	81.39	0.00	-0.23	88.59	88.34	88.10	87.85	87.61	87.36	87.11	86.87	86.62	86.38	86.13	85.89	85.64	85.40
0.50	0.10	18.07	81.33	0.00	2.12	88.42	88.17	87.92	87.67	87.42	87.17	86.92	86.67	86.41	86.16	85.91	85.66	85.41	85.16
1.00	0.10	17.63	81.27	0.00	4.60	88.25	87.99	87.73	87.48	87.22	86.96	86.71	86.45	86.20	85.94	85.68	85.43	85.17	84.91
1.50	0.10	17.19	81.21	0.00	7.20	88.06	87.80	87.54	87.28	87.01	86.75	86.49	86.23	85.97	85.70	85.44	85.18	84.92	84.65
2.00	0.10	16.74	81.15	0.00	9.93	87.87	87.60	87.33	87.06	86.80	86.53	86.26	85.99	85.72	85.46	85.19	84.92	84.65	84.38
2.50	0.10	16.30	81.10	0.00	12.81	87.66	87.39	87.12	86.84	86.57	86.29	86.02	85.74	85.47	85.19	84.92	84.64	84.37	84.09
3.00	0.10	15.86	81.04	0.00	15.86	87.45	87.17	86.89	86.61	86.32	86.04	85.76	85.48	85.20	84.92	84.64	84.35	84.07	83.79
3.50	0.10	15.42	80.98	0.00	19.07	87.22	86.93	86.64	86.36	86.07	85.78	85.49	85.20	84.91	84.62	84.34	84.05	83.76	83.47
4.00	0.10	14.97	80.92	0.00	22.48	86.98	86.68	86.39	86.09	85.80	85.50	85.20	84.91	84.61	84.32	84.02	83.72	83.43	83.13
4.50	0.10	14.53	80.87	0.00	26.09	86.72	86.42	86.12	85.81	85.51	85.20	84.90	84.60	84.29	83.99	83.68	83.38	83.08	82.77
5.00	0.10	14.09	80.81	0.00	29.92	86.45	86.14	85.83	85.52	85.20	84.89	84.58	84.26	83.95	83.64	83.33	83.01	82.70	82.39
5.50	0.10	13.65	80.75	0.00	34.01	86.16	85.84	85.52	85.20	84.88	84.56	84.23	83.91	83.59	83.27	82.95	82.63	82.30	81.98
6.00	0.10	13.21	80.69	0.00	38.36	85.86	85.52	85.19	84.86	84.53	84.20	83.87	83.54	83.20	82.87	82.54	82.21	81.88	81.55
6.50	0.10	12.76	80.63	0.00	43.01	85.53	85.18	84.84	84.50	84.16	83.82	83.48	83.13	82.79	82.45	82.11	81.77	81.43	81.08
7.00	0.10	12.32	80.58	0.00	48.00	85.17	84.82	84.47	84.11	83.76	83.41	83.06	82.70	82.35	82.00	81.65	81.29	80.94	80.59
7.50	0.10	11.88	80.52	0.00	53.35	84.79	84.43	84.06	83.70	83.34	82.97	82.61	82.24	81.88	81.51	81.15	80.78	80.42	80.05
8.00	0.10	11.44	80.46	0.00	59.11	84.39	84.01	83.63	83.25	82.88	82.50	82.12	81.74	81.37	80.99	80.61	80.23	79.86	79.48
8.50	0.10	11.00	80.40	0.00	65.33	83.94	83.55	83.16	82.77	82.38	81.99	81.60	81.21	80.82	80.42	80.03	79.64	79.25	78.86
9.00	0.10	10.55	80.35	0.00	72.07	83.47	83.06	82.66	82.25	81.84	81.44	81.03	80.62	80.22	79.81	79.41	79.00	78.59	78.19
9.50	0.10	10.11	80.29	0.00	79.39	82.95	82.53	82.10	81.68	81.26	80.84	80.41	79.99	79.57	79.15	78.72	78.30	77.88	77.46
10.00	0.10	9.67	80.23	0.00	87.37	82.38	81.94	81.50	81.06	80.62	80.18	79.74	79.30	78.86	78.42	77.98	77.54	77.10	76.66
10.50	0.10	9.23	80.17	0.00	96.11	81.76	81.31	80.85	80.39	79.93	79.47	79.01	78.55	78.09	77.63	77.17	76.71	76.25	75.79
11.00	0.10	8.78	80.11	0.00	105.72	81.08	80.60	80.12	79.64	79.16	78.68	78.20	77.72	77.24	76.76	76.27	75.79	75.31	74.83
11.50	0.10	8.34	80.06	0.00	116.34	80.33	79.83	79.32	78.82	78.31	77.81	77.30	76.80	76.30	75.79	75.29	74.78	74.28	73.77
12.00	0.10	7.90	80.00	0.00	128.13	79.50	78.97	78.44	77.90	77.37	76.84	76.31	75.78	75.25	74.72	74.19	73.66	73.13	72.60
12.50	0.10	7.46	79.94	0.00	141.30	78.56	78.00	77.44	76.88	76.32	75.76	75.20	74.64	74.08	73.52	72.96	72.40	71.84	71.28
13.00	0.10	7.02	79.88	0.00	156.11	77.52	76.92	76.33	75.74	75.14	74.55	73.96	73.37	72.77	72.18	71.59	70.99	70.40	69.81
13.50	0.10	6.57	79.82	0.00	172.87	76.33	75.70	75.07	74.44	73.81	73.18	72.55	71.92	71.29	70.66	70.03	69.40	68.77	68.14
14.00	0.10	6.13	79.77	0.00	192.02	74.97	74.30	73.63	72.95	72.28	71.61	70.94	70.26	69.59	68.92	68.25	67.57	66.90	66.23
14.50	0.10	5.69	79.71	0.00	214.09	73.41	72.69	71.96	71.24	70.52	69.80	69.08	68.36	67.64	66.91	66.19	65.47	64.75	64.03
15.00	0.10	5.25	79.65	0.00	239.81	71.59	70.81	70.03	69.25	68.47	67.69	66.91	66.14	65.36	64.58	63.80	63.02	62.24	61.46

COMBUSTION EFFICIENCY TABLE FOR COAL

Properties of Coal:

Molecular Weight: $483.4 \frac{lb}{lbm\ mole}$

Specific Heat: $0.200 \frac{BTU}{lb\ R}$

Enthalpy of Formation: $-2374 \frac{BTU}{lb}$

Higher Heating Value: $14203.0 \frac{BTU}{lb}$

Dry Products of Combustion						COMBUSTION EFFICIENCY *(Efficiencies are listed by flue gas temperature less surrounding temperature, °F)*													
$\%O_2$	$\%CO$	$\%CO_2$	$\%N_2$	$\%SO_2$	% Excess Air	450	460	470	480	490	500	510	520	530	540	550	560	570	580
0.00	0.10	18.51	81.39	0.00	-0.23	85.15	84.90	84.66	84.41	84.17	83.92	83.68	83.43	83.18	82.94	82.69	82.45	82.20	81.96
0.50	0.10	18.07	81.33	0.00	2.12	84.91	84.66	84.41	84.16	83.91	83.66	83.40	83.15	82.90	82.65	82.40	82.15	81.90	81.65
1.00	0.10	17.63	81.27	0.00	4.60	84.66	84.40	84.14	83.89	83.63	83.38	83.12	82.86	82.61	82.35	82.09	81.84	81.58	81.32
1.50	0.10	17.19	81.21	0.00	7.20	84.39	84.13	83.87	83.61	83.34	83.08	82.82	82.56	82.30	82.03	81.77	81.51	81.25	80.99
2.00	0.10	16.74	81.15	0.00	9.93	84.11	83.85	83.58	83.31	83.04	82.77	82.50	82.24	81.97	81.70	81.43	81.16	80.90	80.63
2.50	0.10	16.30	81.10	0.00	12.81	83.82	83.55	83.27	83.00	82.72	82.45	82.17	81.90	81.62	81.35	81.07	80.80	80.52	80.25
3.00	0.10	15.86	81.04	0.00	15.86	83.51	83.23	82.95	82.67	82.38	82.10	81.82	81.54	81.26	80.98	80.70	80.41	80.13	79.85
3.50	0.10	15.42	80.98	0.00	19.07	83.18	82.89	82.61	82.32	82.03	81.74	81.45	81.16	80.87	80.59	80.30	80.01	79.72	79.43
4.00	0.10	14.97	80.92	0.00	22.48	82.84	82.54	82.24	81.95	81.65	81.35	81.06	80.76	80.47	80.17	79.87	79.58	79.28	78.99
4.50	0.10	14.53	80.87	0.00	26.09	82.47	82.16	81.86	81.55	81.25	80.95	80.64	80.34	80.03	79.73	79.43	79.12	78.82	78.51
5.00	0.10	14.09	80.81	0.00	29.92	82.08	81.76	81.45	81.14	80.83	80.51	80.20	79.89	79.58	79.26	78.95	78.64	78.32	78.01
5.50	0.10	13.65	80.75	0.00	34.01	81.66	81.34	81.02	80.70	80.37	80.05	79.73	79.41	79.09	78.77	78.44	78.12	77.80	77.48
6.00	0.10	13.21	80.69	0.00	38.36	81.22	80.89	80.55	80.22	79.89	79.56	79.23	78.90	78.57	78.23	77.90	77.57	77.24	76.91
6.50	0.10	12.76	80.63	0.00	43.01	80.74	80.40	80.06	79.72	79.38	79.03	78.69	78.35	78.01	77.67	77.33	76.98	76.64	76.30
7.00	0.10	12.32	80.58	0.00	48.00	80.23	79.88	79.53	79.18	78.82	78.47	78.12	77.77	77.41	77.06	76.71	76.35	76.00	75.65
7.50	0.10	11.88	80.52	0.00	53.35	79.69	79.32	78.96	78.60	78.23	77.87	77.50	77.14	76.77	76.41	76.04	75.68	75.31	74.95
8.00	0.10	11.44	80.46	0.00	59.11	79.10	78.72	78.35	77.97	77.59	77.21	76.84	76.46	76.08	75.70	75.33	74.95	74.57	74.20
8.50	0.10	11.00	80.40	0.00	65.33	78.47	78.08	77.69	77.29	76.90	76.51	76.12	75.73	75.34	74.95	74.56	74.16	73.77	73.38
9.00	0.10	10.55	80.35	0.00	72.07	77.78	77.37	76.97	76.56	76.16	75.75	75.34	74.94	74.53	74.13	73.72	73.31	72.91	72.50
9.50	0.10	10.11	80.29	0.00	79.39	77.03	76.61	76.19	75.77	75.34	74.92	74.50	74.08	73.65	73.23	72.81	72.39	71.97	71.54
10.00	0.10	9.67	80.23	0.00	87.37	76.22	75.78	75.34	74.90	74.46	74.02	73.58	73.14	72.70	72.26	71.82	71.38	70.94	70.50
10.50	0.10	9.23	80.17	0.00	96.11	75.33	74.87	74.41	73.95	73.49	73.03	72.57	72.11	71.65	71.19	70.73	70.27	69.81	69.36
11.00	0.10	8.78	80.11	0.00	105.72	74.35	73.87	73.39	72.91	72.43	71.95	71.46	70.98	70.50	70.02	69.54	69.06	68.58	68.10
11.50	0.10	8.34	80.06	0.00	116.34	73.27	72.76	72.26	71.75	71.25	70.75	70.24	69.74	69.23	68.73	68.22	67.72	67.21	66.71
12.00	0.10	7.90	80.00	0.00	128.13	72.07	71.54	71.01	70.47	69.94	69.41	68.88	68.35	67.82	67.29	66.76	66.23	65.70	65.17
12.50	0.10	7.46	79.94	0.00	141.30	70.72	70.16	69.60	69.04	68.48	67.92	67.36	66.80	66.24	65.68	65.12	64.57	64.01	63.45
13.00	0.10	7.02	79.88	0.00	156.11	69.22	68.62	68.03	67.44	66.84	66.25	65.66	65.07	64.47	63.88	63.29	62.69	62.10	61.51
13.50	0.10	6.57	79.82	0.00	172.87	67.51	66.88	66.25	65.62	64.99	64.36	63.73	63.10	62.47	61.84	61.21	60.58	59.95	59.32
14.00	0.10	6.13	79.77	0.00	192.02	65.56	64.88	64.21	63.54	62.86	62.19	61.52	60.85	60.17	59.50	58.83	58.16	57.48	56.81
14.50	0.10	5.69	79.71	0.00	214.09	63.31	62.58	61.86	61.14	60.42	59.70	58.98	58.25	57.53	56.81	56.09	55.37	54.65	53.92
15.00	0.10	5.25	79.65	0.00	239.81	60.68	59.91	59.13	58.35	57.57	56.79	56.01	55.23	54.45	53.68	52.90	52.12	51.34	50.56

COMBUSTION EFFICIENCY TABLE FOR COAL

Properties of Coal:

Molecular Weight: 483.4 $\frac{lb}{lbm\ mole}$

Specific Heat: 0.200 $\frac{BTU}{lb\ R}$

Enthalpy of Formation: -2374 $\frac{BTU}{lb}$

Higher Heating Value: 14203.0 $\frac{BTU}{lb}$

Dry Products of Combustion						COMBUSTION EFFICIENCY *(Efficiencies are listed by flue gas temperature less surrounding temperature, °F)*													
$\%O_2$	$\%CO$	$\%CO_2$	$\%N_2$	$\%SO_2$	% Excess Air	590	600	610	620	630	640	650	660	670	680	690	700	710	720
0.00	0.10	18.51	81.39	0.00	-0.23	81.71	81.47	81.22	80.97	80.73	80.48	80.24	79.99	79.75	79.50	79.25	79.01	78.76	78.52
0.50	0.10	18.07	81.33	0.00	2.12	81.40	81.15	80.90	80.64	80.39	80.14	79.89	79.64	79.39	79.14	78.89	78.64	78.39	78.14
1.00	0.10	17.63	81.27	0.00	4.60	81.07	80.81	80.56	80.30	80.04	79.79	79.53	79.27	79.02	78.76	78.50	78.25	77.99	77.74
1.50	0.10	17.19	81.21	0.00	7.20	80.72	80.46	80.20	79.94	79.67	79.41	79.15	78.89	78.63	78.36	78.10	77.84	77.58	77.32
2.00	0.10	16.74	81.15	0.00	9.93	80.36	80.09	79.82	79.55	79.29	79.02	78.75	78.48	78.21	77.95	77.68	77.41	77.14	76.87
2.50	0.10	16.30	81.10	0.00	12.81	79.98	79.70	79.43	79.15	78.88	78.60	78.33	78.05	77.78	77.50	77.23	76.95	76.68	76.41
3.00	0.10	15.86	81.04	0.00	15.86	79.57	79.29	79.01	78.73	78.45	78.16	77.88	77.60	77.32	77.04	76.76	76.48	76.19	75.91
3.50	0.10	15.42	80.98	0.00	19.07	79.14	78.85	78.57	78.28	77.99	77.70	77.41	77.12	76.83	76.55	76.26	75.97	75.68	75.39
4.00	0.10	14.97	80.92	0.00	22.48	78.69	78.39	78.10	77.80	77.51	77.21	76.91	76.62	76.32	76.03	75.73	75.43	75.14	74.84
4.50	0.10	14.53	80.87	0.00	26.09	78.21	77.91	77.60	77.30	76.99	76.69	76.39	76.08	75.78	75.47	75.17	74.86	74.56	74.26
5.00	0.10	14.09	80.81	0.00	29.92	77.70	77.39	77.07	76.76	76.45	76.14	75.82	75.51	75.20	74.89	74.57	74.26	73.95	73.64
5.50	0.10	13.65	80.75	0.00	34.01	77.16	76.84	76.51	76.19	75.87	75.55	75.23	74.91	74.58	74.26	73.94	73.62	73.30	72.98
6.00	0.10	13.21	80.69	0.00	38.36	76.58	76.25	75.92	75.58	75.25	74.92	74.59	74.26	73.93	73.60	73.26	72.93	72.60	72.27
6.50	0.10	12.76	80.63	0.00	43.01	75.96	75.62	75.28	74.93	74.59	74.25	73.91	73.57	73.23	72.88	72.54	72.20	71.86	71.52
7.00	0.10	12.32	80.58	0.00	48.00	75.30	74.94	74.59	74.24	73.88	73.53	73.18	72.83	72.47	72.12	71.77	71.42	71.06	70.71
7.50	0.10	11.88	80.52	0.00	53.35	74.58	74.22	73.85	73.49	73.13	72.76	72.40	72.03	71.67	71.30	70.94	70.57	70.21	69.84
8.00	0.10	11.44	80.46	0.00	59.11	73.82	73.44	73.06	72.69	72.31	71.93	71.55	71.18	70.80	70.42	70.04	69.67	69.29	68.91
8.50	0.10	11.00	80.40	0.00	65.33	72.99	72.60	72.21	71.82	71.43	71.03	70.64	70.25	69.86	69.47	69.08	68.69	68.30	67.90
9.00	0.10	10.55	80.35	0.00	72.07	72.09	71.69	71.28	70.88	70.47	70.06	69.66	69.25	68.84	68.44	68.03	67.63	67.22	66.81
9.50	0.10	10.11	80.29	0.00	79.39	71.12	70.70	70.28	69.85	69.43	69.01	68.59	68.16	67.74	67.32	66.90	66.47	66.05	65.63
10.00	0.10	9.67	80.23	0.00	87.37	70.06	69.62	69.18	68.74	68.30	67.86	67.42	66.98	66.54	66.10	65.66	65.22	64.78	64.34
10.50	0.10	9.23	80.17	0.00	96.11	68.90	68.44	67.98	67.52	67.06	66.60	66.14	65.68	65.22	64.76	64.30	63.84	63.38	62.92
11.00	0.10	8.78	80.11	0.00	105.72	67.62	67.14	66.66	66.17	65.69	65.21	64.73	64.25	63.77	63.29	62.81	62.33	61.85	61.37
11.50	0.10	8.34	80.06	0.00	116.34	66.21	65.70	65.20	64.69	64.19	63.68	63.18	62.67	62.17	61.66	61.16	60.66	60.15	59.65
12.00	0.10	7.90	80.00	0.00	128.13	64.64	64.11	63.58	63.04	62.51	61.98	61.45	60.92	60.39	59.86	59.33	58.80	58.27	57.74
12.50	0.10	7.46	79.94	0.00	141.30	62.89	62.33	61.77	61.21	60.65	60.09	59.53	58.97	58.41	57.85	57.29	56.73	56.17	55.61
13.00	0.10	7.02	79.88	0.00	156.11	60.92	60.32	59.73	59.14	58.54	57.95	57.36	56.77	56.17	55.58	54.99	54.39	53.80	53.21
13.50	0.10	6.57	79.82	0.00	172.87	58.69	58.06	57.43	56.80	56.17	55.54	54.90	54.27	53.64	53.01	52.38	51.75	51.12	50.49
14.00	0.10	6.13	79.77	0.00	192.02	56.14	55.47	54.79	54.12	53.45	52.78	52.10	51.43	50.76	50.09	49.41	48.74	48.07	47.39
14.50	0.10	5.69	79.71	0.00	214.09	53.20	52.48	51.76	51.04	50.32	49.59	48.87	48.15	47.43	46.71	45.99	45.27	44.54	43.82
15.00	0.10	5.25	79.65	0.00	239.81	49.78	49.00	48.22	47.45	46.67	45.89	45.11	44.33	43.55	42.77	41.99	41.22	40.44	39.66

COMBUSTION EFFICIENCY TABLE FOR COAL

Properties of Coal:

Molecular Weight: 483.4 $\frac{lb}{lbm\ mole}$

Specific Heat: 0.200 $\frac{BTU}{lb\ R}$

Enthalpy of Formation: -2374 $\frac{BTU}{lb}$

Higher Heating Value: 14203.0 $\frac{BTU}{lb}$

Dry Products of Combustion						COMBUSTION EFFICIENCY *(Efficiencies are listed by flue gas temperature less surrounding temperature, °F)*													
$\%O_2$	$\%CO$	$\%CO_2$	$\%N_2$	$\%SO_2$	% Excess Air	170	180	190	200	210	220	230	240	250	260	270	280	290	300
0.00	0.50	18.25	81.25	0.00	-1.14	91.34	91.09	90.85	90.60	90.36	90.12	89.87	89.63	89.39	89.14	88.90	88.66	88.41	88.17
0.50	0.50	17.81	81.19	0.00	1.17	91.23	90.98	90.73	90.48	90.23	89.98	89.73	89.48	89.24	88.99	88.74	88.49	88.24	87.99
1.00	0.50	17.37	81.13	0.00	3.60	91.11	90.86	90.60	90.35	90.09	89.84	89.59	89.33	89.08	88.82	88.57	88.31	88.06	87.81
1.50	0.50	16.92	81.07	0.00	6.15	90.99	90.73	90.47	90.21	89.95	89.69	89.43	89.17	88.91	88.65	88.39	88.13	87.87	87.61
2.00	0.50	16.48	81.01	0.00	8.84	90.86	90.60	90.33	90.07	89.80	89.53	89.27	89.00	88.74	88.47	88.20	87.94	87.67	87.41
2.50	0.50	16.04	80.96	0.00	11.67	90.73	90.46	90.18	89.91	89.64	89.37	89.10	88.82	88.55	88.28	88.01	87.74	87.46	87.19
3.00	0.50	15.60	80.90	0.00	14.65	90.59	90.31	90.03	89.75	89.47	89.19	88.92	88.64	88.36	88.08	87.80	87.52	87.24	86.96
3.50	0.50	15.16	80.84	0.00	17.81	90.44	90.15	89.87	89.58	89.30	89.01	88.72	88.44	88.15	87.87	87.58	87.30	87.01	86.72
4.00	0.50	14.71	80.78	0.00	21.14	90.28	89.99	89.69	89.40	89.11	88.81	88.52	88.23	87.94	87.64	87.35	87.06	86.76	86.47
4.50	0.50	14.27	80.73	0.00	24.68	90.11	89.81	89.51	89.21	88.91	88.61	88.31	88.01	87.70	87.40	87.10	86.80	86.50	86.20
5.00	0.50	13.83	80.67	0.00	28.43	89.93	89.63	89.32	89.01	88.70	88.39	88.08	87.77	87.46	87.15	86.84	86.53	86.22	85.91
5.50	0.50	13.39	80.61	0.00	32.43	89.75	89.43	89.11	88.79	88.47	88.15	87.84	87.52	87.20	86.88	86.56	86.25	85.93	85.61
6.00	0.50	12.95	80.55	0.00	36.68	89.54	89.22	88.89	88.56	88.23	87.91	87.58	87.25	86.92	86.60	86.27	85.94	85.61	85.29
6.50	0.50	12.50	80.49	0.00	41.23	89.33	88.99	88.65	88.32	87.98	87.64	87.30	86.96	86.63	86.29	85.95	85.61	85.28	84.94
7.00	0.50	12.06	80.44	0.00	46.10	89.10	88.75	88.40	88.05	87.70	87.36	87.01	86.66	86.31	85.96	85.61	85.26	84.92	84.57
7.50	0.50	11.62	80.38	0.00	51.32	88.85	88.49	88.13	87.77	87.41	87.05	86.69	86.33	85.97	85.61	85.25	84.89	84.53	84.17
8.00	0.50	11.18	80.32	0.00	56.93	88.59	88.21	87.84	87.47	87.10	86.72	86.35	85.98	85.60	85.23	84.86	84.49	84.11	83.74
8.50	0.50	10.74	80.26	0.00	62.99	88.30	87.91	87.53	87.14	86.75	86.37	85.98	85.60	85.21	84.82	84.44	84.05	83.67	83.28
9.00	0.50	10.29	80.21	0.00	69.55	87.99	87.59	87.19	86.79	86.39	85.99	85.58	85.18	84.78	84.38	83.98	83.58	83.18	82.78
9.50	0.50	9.85	80.15	0.00	76.66	87.65	87.24	86.82	86.40	85.99	85.57	85.15	84.74	84.32	83.90	83.49	83.07	82.65	82.24
10.00	0.50	9.41	80.09	0.00	84.41	87.28	86.85	86.42	85.98	85.55	85.12	84.68	84.25	83.82	83.38	82.95	82.52	82.08	81.65
10.50	0.50	8.97	80.03	0.00	92.88	86.88	86.43	85.98	85.53	85.07	84.62	84.17	83.72	83.26	82.81	82.36	81.91	81.45	81.00
11.00	0.50	8.52	79.97	0.00	102.19	86.44	85.97	85.50	85.02	84.55	84.08	83.60	83.13	82.66	82.19	81.71	81.24	80.77	80.29
11.50	0.50	8.08	79.92	0.00	112.45	85.96	85.46	84.97	84.47	83.97	83.48	82.98	82.49	81.99	81.49	81.00	80.50	80.01	79.51
12.00	0.50	7.64	79.86	0.00	123.82	85.42	84.90	84.38	83.86	83.33	82.81	82.29	81.77	81.25	80.73	80.21	79.69	79.17	78.64
12.50	0.50	7.20	79.80	0.00	136.51	84.82	84.27	83.72	83.17	82.62	82.07	81.52	80.97	80.42	79.87	79.33	78.78	78.23	77.68
13.00	0.50	6.76	79.74	0.00	150.74	84.14	83.56	82.98	82.40	81.82	81.24	80.66	80.08	79.50	78.92	78.34	77.75	77.17	76.59
13.50	0.50	6.31	79.69	0.00	166.81	83.38	82.77	82.15	81.53	80.92	80.30	79.68	79.07	78.45	77.83	77.22	76.60	75.98	75.37
14.00	0.50	5.87	79.63	0.00	185.12	82.52	81.86	81.20	80.55	79.89	79.23	78.57	77.92	77.26	76.60	75.94	75.29	74.63	73.97
14.50	0.50	5.43	79.57	0.00	206.15	81.52	80.82	80.11	79.41	78.71	78.00	77.30	76.59	75.89	75.19	74.48	73.78	73.07	72.37
15.00	0.50	4.99	79.51	0.00	230.58	80.36	79.61	78.85	78.09	77.33	76.57	75.82	75.06	74.30	73.54	72.78	72.02	71.27	70.51

COMBUSTION EFFICIENCY TABLE FOR COAL

Properties of Coal:

Molecular Weight: 483.4 $\frac{lb}{lbm\ mole}$

Specific Heat: 0.200 $\frac{BTU}{lb\ R}$

Enthalpy of Formation: -2374 $\frac{BTU}{lb}$

Higher Heating Value: 14203.0 $\frac{BTU}{lb}$

Dry Products of Combustion						COMBUSTION EFFICIENCY *(Efficiencies are listed by flue gas temperature less surrounding temperature, °F)*													
$\%O_2$	$\%CO$	$\%CO_2$	$\%N_2$	$\%SO_2$	% Excess Air	310	320	330	340	350	360	370	380	390	400	410	420	430	440
0.00	0.50	18.25	81.25	0.00	-1.14	87.92	87.68	87.44	87.19	86.95	86.71	86.46	86.22	85.98	85.73	85.49	85.24	85.00	84.76
0.50	0.50	17.81	81.19	0.00	1.17	87.74	87.49	87.25	87.00	86.75	86.50	86.25	86.00	85.75	85.50	85.26	85.01	84.76	84.51
1.00	0.50	17.37	81.13	0.00	3.60	87.55	87.30	87.04	86.79	86.54	86.28	86.03	85.77	85.52	85.27	85.01	84.76	84.50	84.25
1.50	0.50	16.92	81.07	0.00	6.15	87.35	87.09	86.83	86.57	86.31	86.05	85.79	85.53	85.27	85.01	84.75	84.49	84.23	83.97
2.00	0.50	16.48	81.01	0.00	8.84	87.14	86.88	86.61	86.34	86.08	85.81	85.55	85.28	85.02	84.75	84.48	84.22	83.95	83.69
2.50	0.50	16.04	80.96	0.00	11.67	86.92	86.65	86.38	86.10	85.83	85.56	85.29	85.02	84.74	84.47	84.20	83.93	83.65	83.38
3.00	0.50	15.60	80.90	0.00	14.65	86.69	86.41	86.13	85.85	85.57	85.29	85.01	84.73	84.46	84.18	83.90	83.62	83.34	83.06
3.50	0.50	15.16	80.84	0.00	17.81	86.44	86.15	85.87	85.58	85.30	85.01	84.72	84.44	84.15	83.87	83.58	83.30	83.01	82.72
4.00	0.50	14.71	80.78	0.00	21.14	86.18	85.88	85.59	85.30	85.00	84.71	84.42	84.12	83.83	83.54	83.25	82.95	82.66	82.37
4.50	0.50	14.27	80.73	0.00	24.68	85.90	85.60	85.30	85.00	84.70	84.39	84.09	83.79	83.49	83.19	82.89	82.59	82.29	81.99
5.00	0.50	13.83	80.67	0.00	28.43	85.60	85.30	84.99	84.68	84.37	84.06	83.75	83.44	83.13	82.82	82.51	82.20	81.89	81.58
5.50	0.50	13.39	80.61	0.00	32.43	85.29	84.97	84.65	84.34	84.02	83.70	83.38	83.06	82.75	82.43	82.11	81.79	81.47	81.16
6.00	0.50	12.95	80.55	0.00	36.68	84.96	84.63	84.30	83.97	83.65	83.32	82.99	82.66	82.34	82.01	81.68	81.35	81.03	80.70
6.50	0.50	12.50	80.49	0.00	41.23	84.60	84.26	83.93	83.59	83.25	82.91	82.57	82.24	81.90	81.56	81.22	80.89	80.55	80.21
7.00	0.50	12.06	80.44	0.00	46.10	84.22	83.87	83.52	83.17	82.83	82.48	82.13	81.78	81.43	81.08	80.73	80.39	80.04	79.69
7.50	0.50	11.62	80.38	0.00	51.32	83.81	83.45	83.09	82.73	82.37	82.01	81.65	81.29	80.93	80.57	80.21	79.85	79.49	79.13
8.00	0.50	11.18	80.32	0.00	56.93	83.37	83.00	82.62	82.25	81.88	81.51	81.13	80.76	80.39	80.02	79.64	79.27	78.90	78.53
8.50	0.50	10.74	80.26	0.00	62.99	82.89	82.51	82.12	81.74	81.35	80.96	80.58	80.19	79.81	79.42	79.03	78.65	78.26	77.88
9.00	0.50	10.29	80.21	0.00	69.55	82.38	81.98	81.58	81.18	80.78	80.38	79.98	79.58	79.18	78.77	78.37	77.97	77.57	77.17
9.50	0.50	9.85	80.15	0.00	76.66	81.82	81.41	80.99	80.57	80.16	79.74	79.32	78.91	78.49	78.07	77.66	77.24	76.83	76.41
10.00	0.50	9.41	80.09	0.00	84.41	81.21	80.78	80.35	79.91	79.48	79.05	78.61	78.18	77.75	77.31	76.88	76.44	76.01	75.58
10.50	0.50	8.97	80.03	0.00	92.88	80.55	80.10	79.64	79.19	78.74	78.29	77.84	77.38	76.93	76.48	76.03	75.57	75.12	74.67
11.00	0.50	8.52	79.97	0.00	102.19	79.82	79.35	78.87	78.40	77.93	77.45	76.98	76.51	76.04	75.56	75.09	74.62	74.14	73.67
11.50	0.50	8.08	79.92	0.00	112.45	79.02	78.52	78.02	77.53	77.03	76.54	76.04	75.54	75.05	74.55	74.06	73.56	73.06	72.57
12.00	0.50	7.64	79.86	0.00	123.82	78.12	77.60	77.08	76.56	76.04	75.52	75.00	74.47	73.95	73.43	72.91	72.39	71.87	71.35
12.50	0.50	7.20	79.80	0.00	136.51	77.13	76.58	76.03	75.48	74.93	74.38	73.83	73.28	72.73	72.18	71.63	71.09	70.54	69.99
13.00	0.50	6.76	79.74	0.00	150.74	76.01	75.43	74.85	74.27	73.69	73.11	72.53	71.95	71.36	70.78	70.20	69.62	69.04	68.46
13.50	0.50	6.31	79.69	0.00	166.81	74.75	74.13	73.52	72.90	72.28	71.67	71.05	70.43	69.82	69.20	68.58	67.97	67.35	66.74
14.00	0.50	5.87	79.63	0.00	185.12	73.32	72.66	72.00	71.34	70.69	70.03	69.37	68.71	68.06	67.40	66.74	66.09	65.43	64.77
14.50	0.50	5.43	79.57	0.00	206.15	71.67	70.96	70.26	69.55	68.85	68.15	67.44	66.74	66.03	65.33	64.63	63.92	63.22	62.51
15.00	0.50	4.99	79.51	0.00	230.58	69.75	68.99	68.23	67.47	66.72	65.96	65.20	64.44	63.68	62.93	62.17	61.41	60.65	59.89

COMBUSTION EFFICIENCY TABLE FOR COAL

Properties of Coal:

Molecular Weight: 483.4 $\frac{\text{lb}}{\text{lbm mole}}$

Specific Heat: 0.200 $\frac{\text{BTU}}{\text{lb R}}$

Enthalpy of Formation: -2374 $\frac{\text{BTU}}{\text{lb}}$

Higher Heating Value: 14203.0 $\frac{\text{BTU}}{\text{lb}}$

Dry Products of Combustion						COMBUSTION EFFICIENCY *(Efficiencies are listed by flue gas temperature less surrounding temperature, °F)*													
$\%O_2$	$\%CO$	$\%CO_2$	$\%N_2$	$\%SO_2$	% Excess Air	450	460	470	480	490	500	510	520	530	540	550	560	570	580
0.00	0.50	18.25	81.25	0.00	-1.14	84.51	84.27	84.03	83.78	83.54	83.30	83.05	82.81	82.56	82.32	82.08	81.83	81.59	81.35
0.50	0.50	17.81	81.19	0.00	1.17	84.26	84.01	83.76	83.51	83.27	83.02	82.77	82.52	82.27	82.02	81.77	81.52	81.28	81.03
1.00	0.50	17.37	81.13	0.00	3.60	83.99	83.74	83.49	83.23	82.98	82.72	82.47	82.22	81.96	81.71	81.45	81.20	80.94	80.69
1.50	0.50	16.92	81.07	0.00	6.15	83.71	83.45	83.20	82.94	82.68	82.42	82.16	81.90	81.64	81.38	81.12	80.86	80.60	80.34
2.00	0.50	16.48	81.01	0.00	8.84	83.42	83.15	82.89	82.62	82.36	82.09	81.83	81.56	81.29	81.03	80.76	80.50	80.23	79.97
2.50	0.50	16.04	80.96	0.00	11.67	83.11	82.84	82.57	82.29	82.02	81.75	81.48	81.21	80.93	80.66	80.39	80.12	79.85	79.57
3.00	0.50	15.60	80.90	0.00	14.65	82.78	82.50	82.23	81.95	81.67	81.39	81.11	80.83	80.55	80.28	80.00	79.72	79.44	79.16
3.50	0.50	15.16	80.84	0.00	17.81	82.44	82.15	81.87	81.58	81.30	81.01	80.72	80.44	80.15	79.87	79.58	79.30	79.01	78.72
4.00	0.50	14.71	80.78	0.00	21.14	82.07	81.78	81.49	81.19	80.90	80.61	80.31	80.02	79.73	79.43	79.14	78.85	78.56	78.26
4.50	0.50	14.27	80.73	0.00	24.68	81.69	81.38	81.08	80.78	80.48	80.18	79.88	79.58	79.28	78.98	78.68	78.37	78.07	77.77
5.00	0.50	13.83	80.67	0.00	28.43	81.27	80.96	80.66	80.35	80.04	79.73	79.42	79.11	78.80	78.49	78.18	77.87	77.56	77.25
5.50	0.50	13.39	80.61	0.00	32.43	80.84	80.52	80.20	79.88	79.56	79.25	78.93	78.61	78.29	77.97	77.66	77.34	77.02	76.70
6.00	0.50	12.95	80.55	0.00	36.68	80.37	80.04	79.72	79.39	79.06	78.73	78.40	78.08	77.75	77.42	77.09	76.77	76.44	76.11
6.50	0.50	12.50	80.49	0.00	41.23	79.87	79.54	79.20	78.86	78.52	78.18	77.85	77.51	77.17	76.83	76.50	76.16	75.82	75.48
7.00	0.50	12.06	80.44	0.00	46.10	79.34	78.99	78.64	78.29	77.95	77.60	77.25	76.90	76.55	76.20	75.85	75.51	75.16	74.81
7.50	0.50	11.62	80.38	0.00	51.32	78.77	78.41	78.05	77.69	77.33	76.97	76.61	76.25	75.89	75.53	75.17	74.81	74.45	74.09
8.00	0.50	11.18	80.32	0.00	56.93	78.15	77.78	77.41	77.04	76.66	76.29	75.92	75.54	75.17	74.80	74.43	74.05	73.68	73.31
8.50	0.50	10.74	80.26	0.00	62.99	77.49	77.10	76.72	76.33	75.95	75.56	75.17	74.79	74.40	74.02	73.63	73.24	72.86	72.47
9.00	0.50	10.29	80.21	0.00	69.55	76.77	76.37	75.97	75.57	75.17	74.77	74.37	73.97	73.57	73.17	72.77	72.36	71.96	71.56
9.50	0.50	9.85	80.15	0.00	76.66	75.99	75.58	75.16	74.74	74.33	73.91	73.49	73.08	72.66	72.24	71.83	71.41	71.00	70.58
10.00	0.50	9.41	80.09	0.00	84.41	75.14	74.71	74.28	73.84	73.41	72.98	72.54	72.11	71.67	71.24	70.81	70.37	69.94	69.51
10.50	0.50	8.97	80.03	0.00	92.88	74.22	73.76	73.31	72.86	72.41	71.95	71.50	71.05	70.60	70.14	69.69	69.24	68.79	68.33
11.00	0.50	8.52	79.97	0.00	102.19	73.20	72.72	72.25	71.78	71.30	70.83	70.36	69.89	69.41	68.94	68.47	67.99	67.52	67.05
11.50	0.50	8.08	79.92	0.00	112.45	72.07	71.58	71.08	70.59	70.09	69.59	69.10	68.60	68.11	67.61	67.11	66.62	66.12	65.63
12.00	0.50	7.64	79.86	0.00	123.82	70.83	70.31	69.78	69.26	68.74	68.22	67.70	67.18	66.66	66.14	65.62	65.09	64.57	64.05
12.50	0.50	7.20	79.80	0.00	136.51	69.44	68.89	68.34	67.79	67.24	66.69	66.14	65.59	65.04	64.49	63.94	63.40	62.85	62.30
13.00	0.50	6.76	79.74	0.00	150.74	67.88	67.30	66.72	66.14	65.56	64.97	64.39	63.81	63.23	62.65	62.07	61.49	60.91	60.33
13.50	0.50	6.31	79.69	0.00	166.81	66.12	65.50	64.89	64.27	63.65	63.04	62.42	61.80	61.19	60.57	59.95	59.34	58.72	58.10
14.00	0.50	5.87	79.63	0.00	185.12	64.11	63.46	62.80	62.14	61.48	60.83	60.17	59.51	58.86	58.20	57.54	56.88	56.23	55.57
14.50	0.50	5.43	79.57	0.00	206.15	61.81	61.11	60.40	59.70	58.99	58.29	57.59	56.88	56.18	55.47	54.77	54.07	53.36	52.66
15.00	0.50	4.99	79.51	0.00	230.58	59.13	58.38	57.62	56.86	56.10	55.34	54.58	53.83	53.07	52.31	51.55	50.79	50.04	49.28

COMBUSTION EFFICIENCY TABLE FOR COAL

Properties of Coal:

Molecular Weight: 483.4 $\frac{\text{lb}}{\text{lbm mole}}$

Specific Heat: 0.200 $\frac{\text{BTU}}{\text{lb R}}$

Enthalpy of Formation: -237.4 $\frac{\text{BTU}}{\text{lb}}$

Higher Heating Value: 14203.0 $\frac{\text{BTU}}{\text{lb}}$

Dry Products of Combustion						COMBUSTION EFFICIENCY *(Efficiencies are listed by flue gas temperature less surrounding temperature, °F)*													
$\%O_2$	$\%CO$	$\%CO_2$	$\%N_2$	$\%SO_2$	% Excess Air	590	600	610	620	630	640	650	660	670	680	690	700	710	720
0.00	0.50	18.25	81.25	0.00	-1.14	81.10	80.86	80.62	80.37	80.13	79.89	79.64	79.40	79.15	78.91	78.67	78.42	78.18	77.94
0.50	0.50	17.81	81.19	0.00	1.17	80.78	80.53	80.28	80.03	79.78	79.53	79.29	79.04	78.79	78.54	78.29	78.04	77.79	77.54
1.00	0.50	17.37	81.13	0.00	3.60	80.44	80.18	79.93	79.67	79.42	79.17	78.91	78.66	78.40	78.15	77.89	77.64	77.39	77.13
1.50	0.50	16.92	81.07	0.00	6.15	80.08	79.82	79.56	79.30	79.04	78.78	78.52	78.26	78.00	77.74	77.48	77.22	76.96	76.70
2.00	0.50	16.48	81.01	0.00	8.84	79.70	79.43	79.17	78.90	78.64	78.37	78.10	77.84	77.57	77.31	77.04	76.78	76.51	76.24
2.50	0.50	16.04	80.96	0.00	11.67	79.30	79.03	78.76	78.49	78.21	77.94	77.67	77.40	77.13	76.85	76.58	76.31	76.04	75.76
3.00	0.50	15.60	80.90	0.00	14.65	78.88	78.60	78.32	78.05	77.77	77.49	77.21	76.93	76.65	76.37	76.09	75.82	75.54	75.26
3.50	0.50	15.16	80.84	0.00	17.81	78.44	78.15	77.87	77.58	77.30	77.01	76.72	76.44	76.15	75.87	75.58	75.30	75.01	74.72
4.00	0.50	14.71	80.78	0.00	21.14	77.97	77.68	77.38	77.09	76.80	76.50	76.21	75.92	75.62	75.33	75.04	74.75	74.45	74.16
4.50	0.50	14.27	80.73	0.00	24.68	77.47	77.17	76.87	76.57	76.27	75.97	75.67	75.37	75.06	74.76	74.46	74.16	73.86	73.56
5.00	0.50	13.83	80.67	0.00	28.43	76.94	76.63	76.33	76.02	75.71	75.40	75.09	74.78	74.47	74.16	73.85	73.54	73.23	72.92
5.50	0.50	13.39	80.61	0.00	32.43	76.38	76.06	75.75	75.43	75.11	74.79	74.47	74.16	73.84	73.52	73.20	72.88	72.56	72.25
6.00	0.50	12.95	80.55	0.00	36.68	75.78	75.46	75.13	74.80	74.47	74.15	73.82	73.49	73.16	72.84	72.51	72.18	71.85	71.52
6.50	0.50	12.50	80.49	0.00	41.23	75.14	74.81	74.47	74.13	73.79	73.46	73.12	72.78	72.44	72.11	71.77	71.43	71.09	70.75
7.00	0.50	12.06	80.44	0.00	46.10	74.46	74.11	73.76	73.41	73.07	72.72	72.37	72.02	71.67	71.32	70.98	70.63	70.28	69.93
7.50	0.50	11.62	80.38	0.00	51.32	73.73	73.37	73.01	72.65	72.29	71.93	71.57	71.21	70.85	70.49	70.13	69.77	69.40	69.04
8.00	0.50	11.18	80.32	0.00	56.93	72.94	72.56	72.19	71.82	71.45	71.07	70.70	70.33	69.96	69.58	69.21	68.84	68.47	68.09
8.50	0.50	10.74	80.26	0.00	62.99	72.08	71.70	71.31	70.93	70.54	70.15	69.77	69.38	69.00	68.61	68.22	67.84	67.45	67.07
9.00	0.50	10.29	80.21	0.00	69.55	71.16	70.76	70.36	69.96	69.56	69.16	68.76	68.36	67.96	67.56	67.16	66.76	66.36	65.96
9.50	0.50	9.85	80.15	0.00	76.66	70.16	69.75	69.33	68.91	68.50	68.08	67.66	67.25	66.83	66.42	66.00	65.58	65.17	64.75
10.00	0.50	9.41	80.09	0.00	84.41	69.07	68.64	68.21	67.77	67.34	66.90	66.47	66.04	65.60	65.17	64.74	64.30	63.87	63.44
10.50	0.50	8.97	80.03	0.00	92.88	67.88	67.43	66.98	66.52	66.07	65.62	65.17	64.71	64.26	63.81	63.36	62.90	62.45	62.00
11.00	0.50	8.52	79.97	0.00	102.19	66.57	66.10	65.63	65.15	64.68	64.21	63.73	63.26	62.79	62.32	61.84	61.37	60.90	60.42
11.50	0.50	8.08	79.92	0.00	112.45	65.13	64.63	64.14	63.64	63.15	62.65	62.16	61.66	61.16	60.67	60.17	59.68	59.18	58.68
12.00	0.50	7.64	79.86	0.00	123.82	63.53	63.01	62.49	61.97	61.45	60.92	60.40	59.88	59.36	58.84	58.32	57.80	57.28	56.76
12.50	0.50	7.20	79.80	0.00	136.51	61.75	61.20	60.65	60.10	59.55	59.00	58.45	57.90	57.35	56.80	56.25	55.70	55.16	54.61
13.00	0.50	6.76	79.74	0.00	150.74	59.75	59.17	58.58	58.00	57.42	56.84	56.26	55.68	55.10	54.52	53.94	53.36	52.78	52.19
13.50	0.50	6.31	79.69	0.00	166.81	57.49	56.87	56.25	55.64	55.02	54.40	53.79	53.17	52.55	51.94	51.32	50.70	50.09	49.47
14.00	0.50	5.87	79.63	0.00	185.12	54.91	54.25	53.60	52.94	52.28	51.63	50.97	50.31	49.65	49.00	48.34	47.68	47.02	46.37
14.50	0.50	5.43	79.57	0.00	206.15	51.95	51.25	50.55	49.84	49.14	48.43	47.73	47.03	46.32	45.62	44.91	44.21	43.51	42.80
15.00	0.50	4.99	79.51	0.00	230.58	48.52	47.76	47.00	46.24	45.49	44.73	43.97	43.21	42.45	41.69	40.94	40.18	39.42	38.66

UNLIMITED DISTRIBUTION

Arizona Public Service Co.
Attn: Thomas C. Lepley
J. McGuirk
P.O. Box 53999
Phoenix, AZ 85072-3999

Australian National University
Department of Engineering Physics
Attn: Prof. Stephen Kaneff
P.O. Box 4
Canberra ACT 2600, AUSTRALIA

Babcock & Wilcox
Attn: Pat Bator
20 S. Van Buren Ave.
Barberton, OH 44203

Barber-Nichols Engineering
Attn: R. Barber
6325 West 55th Ave.
Arvada, CO 80002

Besicorp Group, Inc
Attn: William Beesmer
1151 Flatbush Road
Kingston, NY 12401

BDM Corporation
Attn: W. E. Schwinkendorf
1801 Randolph Street
Albuquerque, NM 87106

Battelle Memorial Institute
Pacific Northwest Laboratory
Attn: T. Williams
P.O. Box 999
Richland, WA 99352

Bechtel Group, Inc.
Attn: P. DeLaquil
W. Stolte
P.O. Box 3965
50 Beale Street
San Francisco, CA 94119
California Energy Commission
Attn: Mr. Pramod Kulkarni
1516 - 9th Street
Sacramento, CA 95814
(30 Copies)

Cummins Engine Company
Attn: Dr. Isoroku Kubo
Mail Code 50179
Box 3005
Columbus, IN 47202-3005

DLR
Institute for Technical Thermodynamics
Attn: R. Buck
Pfaffenwaldring 38-40
7000 Stuttgart 80
FEDERAL REPUBLIC OF GERMANY

DSET
Attn: G. A. Zerlaut
Box 1850
Black Canyon Stage I
Phoenix, AZ 85029

Electric Power Research Inst.
Attn: E. DeMeo
J. Bigger
3412 Hillview Avenue
Palo Alto, CA 94303

Energy Concepts Co.
Attn: Don Erickson
627 Ridgely Ave.
Annapolis, MD 21401

ENTECH, Inc.
Attn: M. O'Neill
P.O. Box 612246
DFW Airport, TX 75261

Federal Energy Management Activities
CE 10.1
U.S. Department of Energy
1000 Independence Ave.
Washington, DC 20585

Florida Solar Energy Center
Attn: David Block
Kirk Collier
300 State Road 401
Cape Canaveral, FL 32920

Foster Wheeler Solar Dev. Corp.
Attn: M. D. Garber
12 Peach Tree Hill Road
Livingston, NJ 07039

Georgia Inst. of Technology
attn: Sheldon Jeter
School of Mechanical Engineering
Atlanta, GA 30332

Georgia Power Co.
Attn: Dennis Keebaugh
W. King
7 Solar Circle
Shenandoah, GA 30265

Gould Inc., Foil Division
Attn: David C. Knipfer,
Sr. Mech. Engineer
2929 W. Chandler Blvd.
P.O. Box 190
Chandler, AZ 85244-0190

Industrial Solar Technologies
Attn: Ken May
Randy Gee
5775 West 52nd Ave.
Denver, CO 80212
(5 copies)

Kearney & Associates
Attn: David W. Kearney
14022 Condessa Drive
Del Mar, CA 92014

Lawrence Berkeley Laboratory
Building 90-2024
University of California
Attn: Dr. Arlon Hunt
1 Cyclotron Road
Berkeley, CA 94720

Meridian Corporation
Attn: D. Kumar
Anil Cabraal
4300 King Street
Suite 400
Alexandria, VA 22302-1508

National Center for
Appropriate Technology
P.O. Box 3838
Butte, MT 59702

Southwest Technology Development
Institute
New Mexico State University
Attn: Rudi Shoemaker
Box 3 SOL
Las Cruces, NM 88003
(2 copies)

New York State Energy Research
and Dev. Authority
Attn: Fred Strnisa
2 Rockefeller Plaza
Albany, NY 12223

Oak Ridge National Lab
Attn: Paul Gnadt, Energy Div.
Building 5500A
P.O. Box X
Oak Ridge, TN 37830

Pennsylvania Energy Office
Attn: Dr. Phillip Schuller,
Associate Director
116 Pine Street
Harrisburg, PA 17101-1227

Power Kinetics, Inc.
Attn: W.E. Rogers (Bill)
President
415 River St.
Troy, NY 12180-2822

Renewable Energy Institute
Attn: Kevin Porter
1001 Connecticut Avenue NW
Suite 719
Washington, DC 20036

Rensselaer Polytechnic Inst.
Attn: Jose M. Borrego
EESE Dept. JEC 7020
Troy, NY 12181

Science Applications
International Corp.
Attn: Barry Butler
Kelly Beninga
10401 Roselle Street
San Diego, CA 92121

Solar Energy Industries Association
Attn: Ken Sheinkopf
Linda Ladas
Suite 610
1730 North Lynn St.
Arlington, VA 22209-2009

Solar Kinetics, Inc.
Attn: J. A. Hutchison
Dave White
Mr. Paul Schertz
P.O. Box 540636
Dallas, TX 75354-0636

Solar Power Engineering Co. Inc.
P.O. Box 91
Attn: T. Buna
Morrison, CO 80468

Solar Steam
Attn: D. E. Wood
P.O. Box 32
Fox Island, WA 98333

Southern California Edison Co.
Attn: N. Patapoff
C. Lopez
P.O. Box 800
Rosemead, CA 91770

State of California
Department of Corrections
Attn: Harry Franey
Energy Management Liaison
Planning and Construction Div.
501 J Street, Room 315
P.O. Box 942883
Sacramento, CA 94283-0001
(30 Copies)

Sunsteam
Attn: Allen Bronstein
998 San Antonio Rd.
Palo Alto, CA 94303

United Solar Technologies
Attn: Richard J. Kelly, Director (2)
Carlo LaPorta (1)
3434 Martin Way, Suite One
Olympia, WA 98506
(3 Copies)

USAF/ETAC
ENGRC Meteorology Section
Attn: Hilda Snelling
Scott AFB, IL 62225

3M-Energy Control Products
Attn: B. Benson
207-1W 3M Center
St. Paul, MN 55144

3M-Solar Optics Program
Attn: Paul Jaster
Heather Kutzler
3M Center
Bldg. 225-2n-06
St. Paul, MN 55144-1000

USAF
1606 CES/CC
Attn:Colonel Eldon Franklin
Kirtland AFB, NM 87117-5496

University of Central Florida
Attn: Dr. G. G. Ventre
College of Engineering
P.O. Box 2500
Orlando, FL 32816

University of Houston
Energy Laboratory; SPA
Attn: Lorin Vant-Hull
Houston, TX 77004

University of New Mexico
Department of Mechanical Engr.
Attn: M. W. Wilden
Albuquerque, NM 87131

Sandia National Laboratories:
6200 Bill Marshall
6201 Paul Klimas
6215 Chris Cameron
6215 Mark Ralph
6215 Earl Rush (5)
6215 Library (3)
6216 Craig Tyner
6216 John Anderson (5)
6216 Dave Menicucci (5)
6216 Jim Pacheco (5)
6216 Lindsay Evans
7141 S. A. Landenberger (5)
7151 G. C. Claycomb (3)
7613-2 Document Processing for DOE/OSTI (8)
8523-2 Central Technical Files